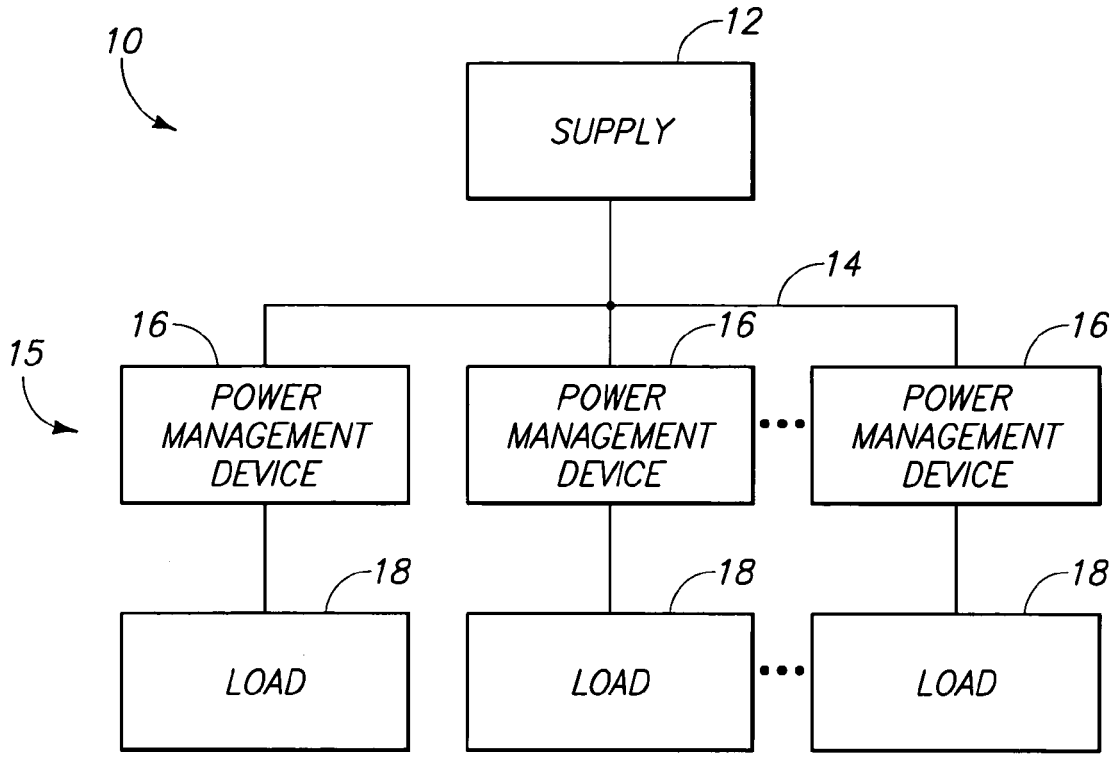
10
12
SUPPLY
14
15
16
POWER MANAGEMENT DEVICE
16
POWER MANAGEMENT DEVICE
16
POWER MANAGEMENT DEVICE
18
LOAD
18
LOAD
18
LOAD

FIG. 1