US007149605B2

(12) United States Patent
Chassin et al.

(10) Patent No.: US 7,149,605 B2
(45) Date of Patent: Dec. 12, 2006

(54) **ELECTRICAL POWER DISTRIBUTION CONTROL METHODS, ELECTRICAL ENERGY DEMAND MONITORING METHODS, AND POWER MANAGEMENT DEVICES**

(75) Inventors: **David P. Chassin**, Pasco, WA (US); **Matthew K. Donnelly**, Kennewick, WA (US); **Jeffery E. Dagle**, Richland, WA (US)

(73) Assignee: **Battelle Memorial Institute**, Richland, WA (US)

(*) Notice: Subject to any disclaimer, the term of this patent is extended or adjusted under 35 U.S.C. 154(b) by 0 days.

(21) Appl. No.: **10/461,137**

(22) Filed: **Jun. 13, 2003**

(65) **Prior Publication Data**

US 2004/0254688 A1 Dec. 16, 2004

(51) **Int. Cl.**
G05D 11/00 (2006.01)

(52) **U.S. Cl.** **700/295**; 700/286; 700/296

(58) **Field of Classification Search** 700/295, 700/296, 286, 291, 297, 22, 293, 294, 298; 713/340, 601; 705/400, 412
See application file for complete search history.

(56) **References Cited**

U.S. PATENT DOCUMENTS

2,238,624 A	4/1941	Clark	
4,090,088 A	5/1978	McMahon et al.	
4,135,101 A	1/1979	Young et al.	
4,213,058 A	7/1980	Townsend	
4,317,049 A	2/1982	Schweppe	
4,449,178 A	5/1984	Blau, Jr. et al.	
4,472,640 A	9/1984	Elmer	
4,644,320 A	2/1987	Carr et al.	
4,835,706 A	5/1989	Asahi	
4,868,412 A	9/1989	Owens	
5,205,318 A	4/1993	Massaro et al.	
5,220,807 A	6/1993	Bourne et al.	
5,237,305 A	8/1993	Ishikuro et al.	
5,436,510 A	7/1995	Gilbert	
5,442,335 A	8/1995	Cantin et al.	
5,523,631 A	6/1996	Fishman et al.	
5,543,667 A	8/1996	Shavit et al.	
5,544,036 A	8/1996	Brown, Jr. et al.	
5,566,085 A	10/1996	Marceau et al.	
5,625,236 A	4/1997	Lefebvre et al.	
5,627,759 A *	5/1997	Bearden et al.	702/62

(Continued)

FOREIGN PATENT DOCUMENTS

CA 2082914 1/1999

(Continued)

OTHER PUBLICATIONS

"Distribution Automation;" http://www.dt2003.events.pennet.com/confrence_program.cfm; Feb. 2-4, 2003; 20 pps.

(Continued)

Primary Examiner—Leo Picard
Assistant Examiner—Charles Kasenge
(74) *Attorney, Agent, or Firm*—Wells St. John, P.S.

(57) **ABSTRACT**

Electrical power distribution control methods, electrical energy demand monitoring methods, and power management devices are described. In one aspect, an electrical power distribution control method includes providing electrical energy from an electrical power distribution system, applying the electrical energy to a load, providing a plurality of different values for a threshold at a plurality of moments in time and corresponding to an electrical characteristic of the electrical energy, and adjusting an amount of the electrical energy applied to the load responsive to an electrical characteristic of the electrical energy triggering one of the values of the threshold at the respective moment in time.
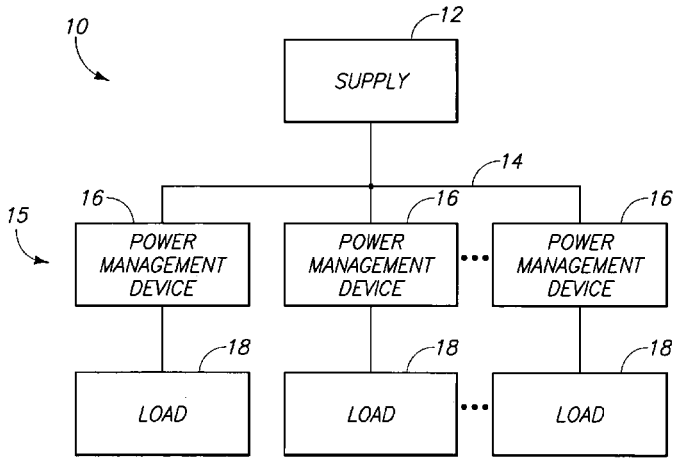
93 Claims, 5 Drawing Sheets