US009638505B2

(12) **United States Patent**
Halander et al.

(10) **Patent No.: US 9,638,505 B2**
(45) **Date of Patent: May 2, 2017**

(54) **SYSTEMS FOR DELIVERING EXPLOSIVES AND METHODS RELATED THERETO**

(71) Applicant: **Dyno Nobel Inc.**, Salt Lake City, UT (US)

(72) Inventors: **John B. Halander**, Salt Lake City, UT (US); **Cornelis L. Kome**, Salt Lake City, UT (US); **Casey L. Nelson**, Murray, UT (US)

(73) Assignee: **Dyno Nobel, Inc.**, Salt Lake City, UT (US)

(*) Notice: Subject to any disclaimer, the term of this patent is extended or adjusted under 35 U.S.C. 154(b) by 156 days.

(21) Appl. No.: **14/618,231**

(22) Filed: **Feb. 10, 2015**

(65) **Prior Publication Data**

US 2015/0168116 A1 Jun. 18, 2015

Related U.S. Application Data

(63) Continuation of application No. 13/909,818, filed on Jun. 4, 2013, now Pat. No. 9,207,055.

(60) Provisional application No. 61/762,149, filed on Feb. 7, 2013.

(51) **Int. Cl.**

F42D 1/10	(2006.01)
F42D 3/04	(2006.01)
F42D 1/04	(2006.01)
F42D 99/00	(2009.01)

(52) **U.S. Cl.**

CPC ***F42D 1/10*** (2013.01); ***F42D 1/04*** (2013.01); ***F42D 3/04*** (2013.01); ***F42D 99/00*** (2013.01)

(58) **Field of Classification Search**

CPC F42D 1/00; F42D 1/04; F42D 1/08; F42D 1/10; F42D 3/04; F42D 99/00

USPC 102/313

See application file for complete search history.

(56) **References Cited**

U.S. PATENT DOCUMENTS

2,745,346	A	5/1953	Aitchison et al.	
3,482,640	A	4/1968	Browning	
3,582,411	A	6/1971	Brockbank et al.	
3,617,401	A	11/1971	Mortensen et al.	
4,189,185	A	2/1980	Kammerer, Jr. et al.	
4,585,496	A	4/1986	Honeyman et al.	
4,615,752	A	10/1986	Miller	
4,737,207	A	4/1988	Ehrnstrom et al.	
4,966,077	A	10/1990	Halliday et al.	
5,524,523	A	6/1996	Lubbe et al.	
6,113,715	A *	9/2000	Halander	C06B 47/145 142/2

(Continued)

FOREIGN PATENT DOCUMENTS

EP	0194774	9/1986
EP	0612971	8/1994

(Continued)

OTHER PUBLICATIONS

Non-Final Office Action dated Feb. 12, 2016 for U.S Appl. No. 14/962,770.

(Continued)

Primary Examiner — James S Bergin

(74) *Attorney, Agent, or Firm* — Stoel Rives LLP

(57) **ABSTRACT**

Systems for delivering explosives with variable densities are disclosed herein. Methods of delivering explosives with variable densities and methods of varying the energy of explosives in a blasthole are disclosed herein.
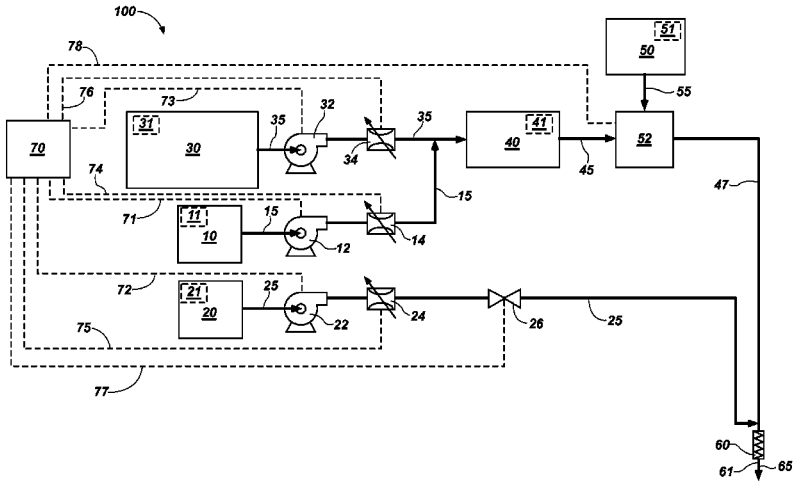
17 Claims, 5 Drawing Sheets