US009637005B2

(12) **United States Patent**
Hendrickson et al.

(10) **Patent No.: US 9,637,005 B2**
(45) **Date of Patent: May 2, 2017**

(54) **DISPLAY CONVEYING TROLLEY POSITION TO OPERATOR**

(75) Inventors: **Matthew L. Hendrickson**, Dunlap, IL (US); **Donald J. Gilmore**, Peoria, IL (US)

(73) Assignee: **Caterpillar Inc.**, Peoria, IL (US)

(*) Notice: Subject to any disclaimer, the term of this patent is extended or adjusted under 35 U.S.C. 154(b) by 908 days.

(21) Appl. No.: **13/435,129**

(22) Filed: **Mar. 30, 2012**

(65) **Prior Publication Data**

US 2013/0261901 A1 Oct. 3, 2013

(51) **Int. Cl.**

B60L 9/00	(2006.01)
B60L 5/18	(2006.01)
B61K 9/00	(2006.01)

(52) **U.S. Cl.**

CPC ***B60L 9/00*** (2013.01); *B60L 2200/36* (2013.01); *B60L 2240/622* (2013.01); *B60L 2250/10* (2013.01); *B60L 2250/16* (2013.01); *Y02T 10/7291* (2013.01); *Y02T 90/16* (2013.01); *Y02T 90/162* (2013.01)

(58) **Field of Classification Search**

CPC B60L 5/18; B60L 9/00; B60L 9/16; B60L 5/04; B61D 17/00; G06F 19/00; G06K 9/00; B61L 27/04; H02J 7/00; B61K 9/00

USPC 701/2, 20, 50; 191/2, 87; 324/217; 320/109, 167; 382/100; 307/9.1; 358/3.28; 705/304; 250/559.01; 105/1.5; 180/2.1

See application file for complete search history.

(56) **References Cited**

U.S. PATENT DOCUMENTS

4,745,997	A *	5/1988	Takei	B60L 5/14 191/8
5,293,947	A *	3/1994	Stratton	B60K 6/46 180/2.1
6,029,104	A *	2/2000	Kim	B61L 23/005 104/88.04
7,340,329	B2	3/2008	Marra et al.	
7,548,804	B2	6/2009	Rossow et al.	
7,941,158	B2	5/2011	Olson	
8,071,967	B2 *	12/2011	Watabe et al.	250/559.01
2006/0060105	A1 *	3/2006	Webster	A63H 19/26 105/1.5
2007/0000744	A1 *	1/2007	Craig et al.	191/2
2008/0306662	A1 *	12/2008	Herschel	701/50
2010/0039067	A1 *	2/2010	Hill	B60L 5/42 320/109
2010/0114404	A1 *	5/2010	Donnelly	701/2

(Continued)

FOREIGN PATENT DOCUMENTS

CN	1085169	4/1994
CN	101730773	6/2010

(Continued)

Primary Examiner — Yuri Kan

(74) *Attorney, Agent, or Firm* — Miller, Matthias & Hull

(57) **ABSTRACT**

A display for use in an off-highway truck includes a position element providing an indication to an operator of the off-highway truck to align the off-highway truck with an overhead trolley line as well as a pantograph element providing an indication to the operator to raise or lower a pantograph associated with the off-highway truck to respectively make or break contact with the overhead trolley line. In an optional aspect, an alarm indicator may be provided for signaling an alarm condition to the operator of the off-highway truck.
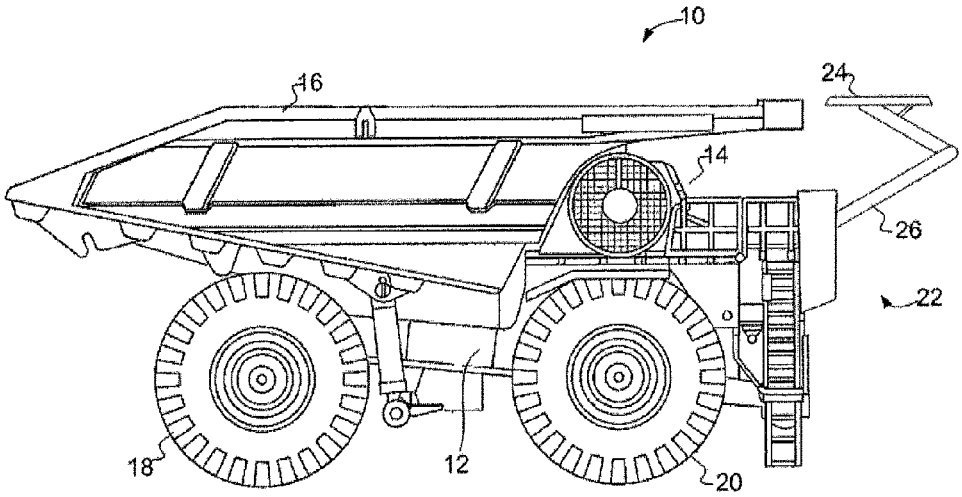
6 Claims, 5 Drawing Sheets