SAMPLE TAKING APPARATUS

Filed Aug. 7, 1953 2 Sheets-Sheet 2

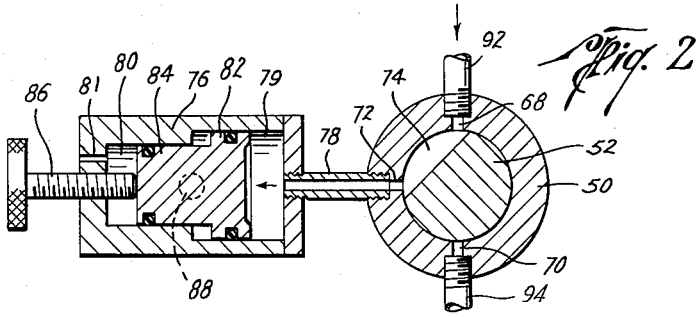

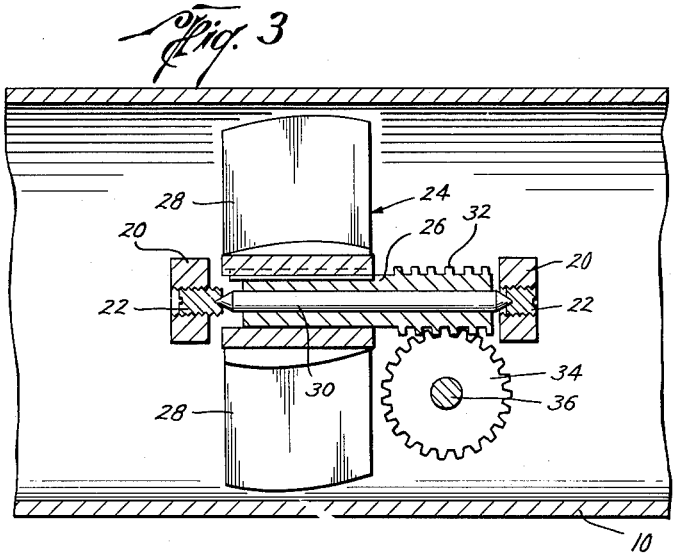

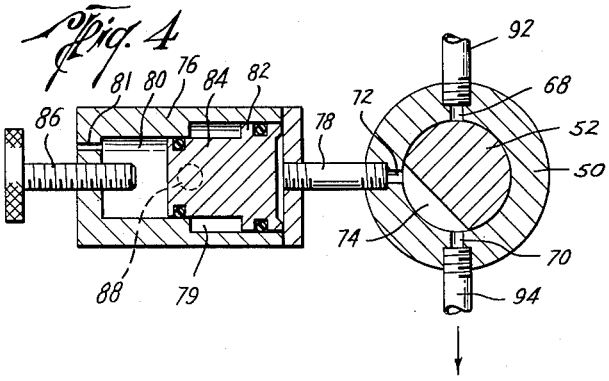

Arthur E. McFarland
Artie F. McFarland
INVENTORS

BY Charles E. Lightfoot
ATTORNEY