Jan. 3, 1956 A. E. McFARLAND ET AL 2,729,105

SAMPLE TAKING APPARATUS

Filed Aug. 7, 1953 2 Sheets-Sheet 1

Fig. 1

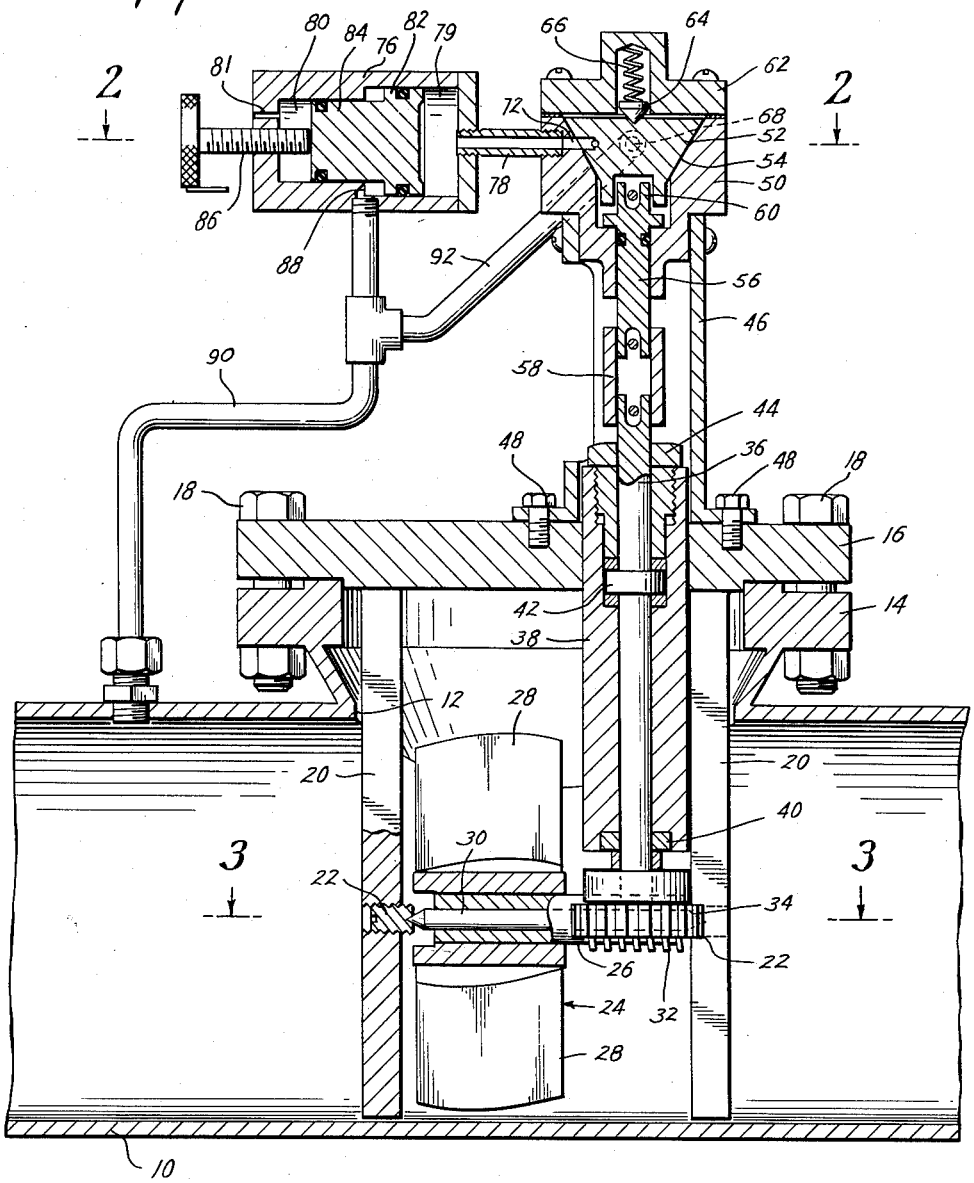

Arthur E. McFarland
Artie F. McFarland
INVENTORS

BY Charles E. Lightfoot
ATTORNEY