July 12, 1938. H. HIERTA 2,123,305

MOTOR VEHICLE

Filed June 20, 1934 2 Sheets-Sheet 1

FIG. 1.

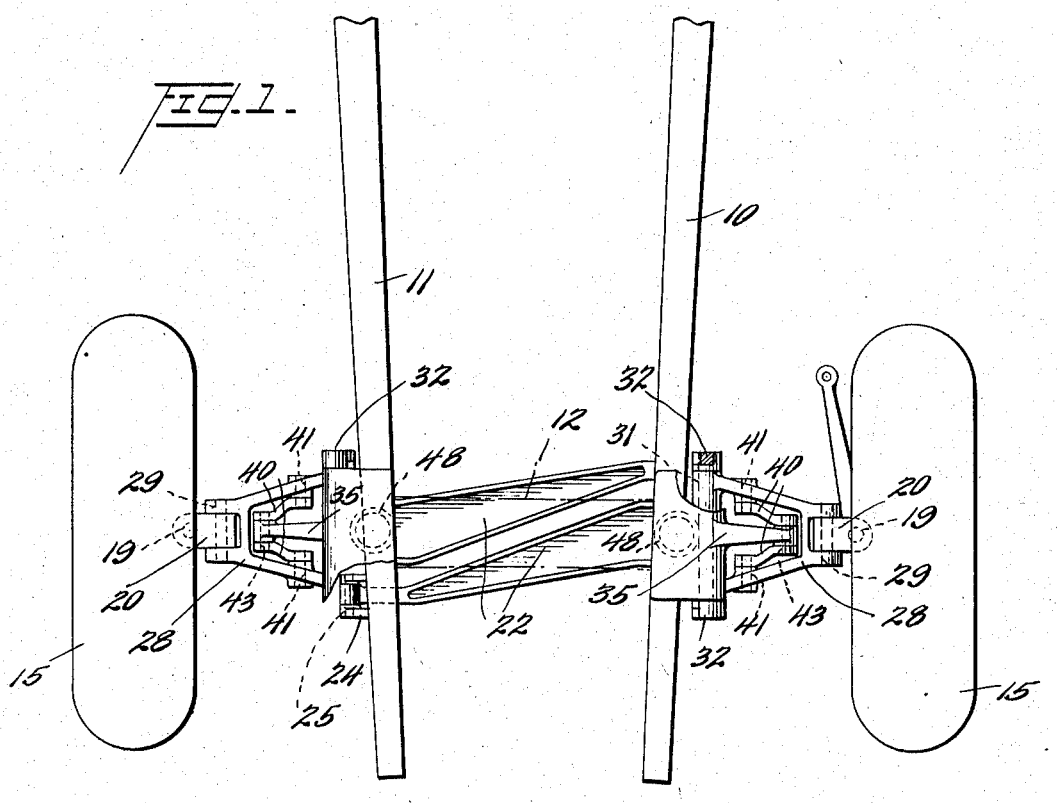

FIG. 2.

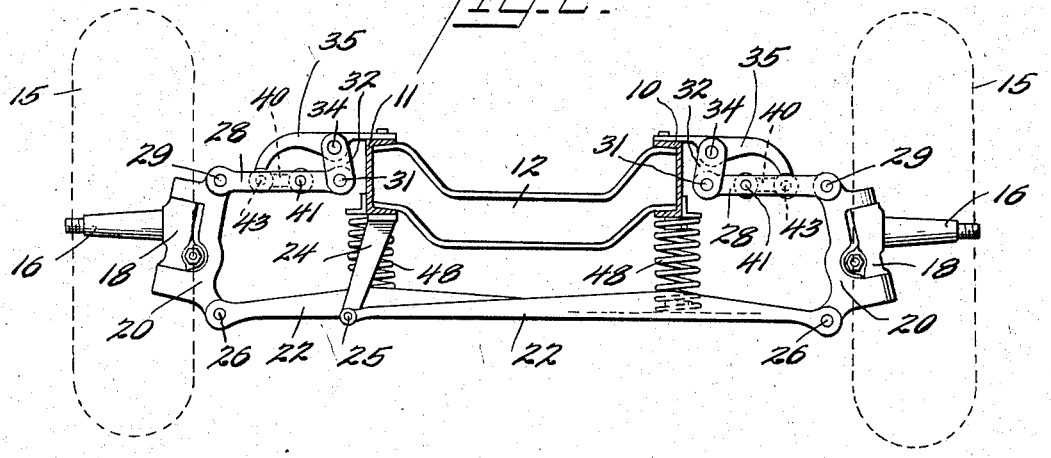

Inventor

Hans Hierta

Watson, Cole, Grindle & Watson

By

Attorney