US009114005B2

(12) **United States Patent**
Simonov et al.

(10) **Patent No.: US 9,114,005 B2**
(45) **Date of Patent: Aug. 25, 2015**

(54) **ACCOMMODATIVE INTRAOCULAR LENS DRIVEN BY CILIARY MASS**

(75) Inventors: **Aleksey Nikolaevich Simonov**, The Hague (NL); **Michiel Christiaan Rombach**, Breda (NL)

(73) Assignee: **Akkolens International B.V.**, Breda (NL)

(*) Notice: Subject to any disclaimer, the term of this patent is extended or adjusted under 35 U.S.C. 154(b) by 0 days.

(21) Appl. No.: **13/510,132**

(22) PCT Filed: **Nov. 17, 2010**

(86) PCT No.: **PCT/NL2010/050766**

§ 371 (c)(1),
(2), (4) Date: **Aug. 24, 2012**

(87) PCT Pub. No.: **WO2011/062486**

PCT Pub. Date: **May 26, 2011**

(65) **Prior Publication Data**

US 2012/0310341 A1 Dec. 6, 2012

(30) **Foreign Application Priority Data**

Nov. 17, 2009 (NL) 2003816

(51) **Int. Cl.**
A61F 2/16 (2006.01)

(52) **U.S. Cl.**
CPC ***A61F 2/1613*** (2013.01); ***A61F 2/1635*** (2013.01); *A61F 2/1648* (2013.01)

(58) **Field of Classification Search**
USPC 623/6.37
See application file for complete search history.

(56) **References Cited**

U.S. PATENT DOCUMENTS

5,275,623	A	1/1994	Sarfarazi	
5,674,282	A	10/1997	Cumming	
6,197,059	B1	3/2001	Cumming	
6,551,354	B1 *	4/2003	Ghazizadeh et al.	623/6.43
8,182,531	B2	5/2012	Hermans et al.	
2002/0107568	A1	8/2002	Zadno-Azizi et al.	
2003/0109925	A1 *	6/2003	Ghazizadeh et al.	623/6.34
2004/0215340	A1	10/2004	Messner et al.	
2007/0106377	A1	5/2007	Smith et al.	
2007/0108643	A1	5/2007	Zadno-Azizi et al.	
2008/0046076	A1	2/2008	Rombach	
2008/0215146	A1	9/2008	Rombach	

(Continued)

FOREIGN PATENT DOCUMENTS

WO	0166042	A1	9/2001
WO	2005084587	A2	9/2005

(Continued)

OTHER PUBLICATIONS

Bernet et al. "Adjustable refractive power from diffractive moiré elements". Applied Optics. Jul. 20, 2008. pp. 3722-3730.vol. 47, No. 21.

Primary Examiner — David H Willse
Assistant Examiner — Tiffany Shipmon
(74) *Attorney, Agent, or Firm* — The Webb Law Firm

(57) **ABSTRACT**

The invention relates to an intraocular accommodative lens, comprising an optical arrangement and haptics, the lens being adapted for variable focusing by movement of at least one part of the optical arrangement by at least one of the haptics, wherein the haptics comprise a part adapted to transfer a movement from the ciliary mass to the optical arrangement. This forms an attractive way of driving the variable lens, in particular for locations of the lens avoiding the capsular bag.
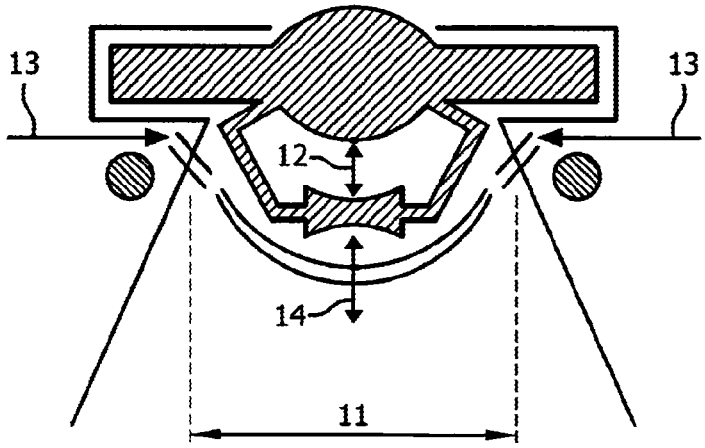
3 Claims, 2 Drawing Sheets