US009409205B2

(12) **United States Patent**
Hakan

(10) **Patent No.: US 9,409,205 B2**
(45) **Date of Patent: Aug. 9, 2016**

(54) **METHOD AND DEVICE FOR DOSING AND COATING**

(75) Inventor: **Karlsson Hakan**, Saffle (SE)

(73) Assignee: **MATTSSONFORETAGEN I UDDEVALLA AB**, Uddevalla (SE)

(*) Notice: Subject to any disclaimer, the term of this patent is extended or adjusted under 35 U.S.C. 154(b) by 0 days.

(21) Appl. No.: **14/002,742**

(22) PCT Filed: **Mar. 2, 2012**

(86) PCT No.: **PCT/SE2012/050243**

§ 371 (c)(1),
(2), (4) Date: **Oct. 4, 2013**

(87) PCT Pub. No.: **WO2012/118438**

PCT Pub. Date: **Sep. 7, 2012**

(65) **Prior Publication Data**

US 2014/0023790 A1 Jan. 23, 2014

(30) **Foreign Application Priority Data**

Mar. 3, 2011 (SE) 11501947

(51) **Int. Cl.**
B05C 11/02 (2006.01)
B05D 1/26 (2006.01)
(Continued)

(52) **U.S. Cl.**
CPC ***B05D 1/26*** (2013.01); ***B05C 1/0813*** (2013.01); ***B05C 5/00*** (2013.01); ***B05C 5/0254*** (2013.01); ***B05C 5/0262*** (2013.01); ***B05C 11/042*** (2013.01); *B05C 1/083* (2013.01); *B05C 1/0834* (2013.01); *B05C 9/04* (2013.01); *B05C 11/02* (2013.01); *B05C 11/025* (2013.01); *B05C 11/1039* (2013.01)

(58) **Field of Classification Search**
CPC B05D 1/26; B05D 1/28; B05C 11/02; B05C 11/025; B05C 11/042; B05C 11/1039; B05C 1/0813; B05C 1/083; B05C 1/0834; B05C 5/00; B05C 5/0254; B05C 5/0262; B05C 9/04
USPC 118/300; 427/421.1, 428.14, 428.17
See application file for complete search history.

(56) **References Cited**

U.S. PATENT DOCUMENTS

3,706,508 A * 12/1972 Moskowitz et al. 415/115
3,857,267 A * 12/1974 Lemaire et al. 72/209
(Continued)

FOREIGN PATENT DOCUMENTS

CN	101316662	7/2012
EP	0931878	7/1999
WO	2007061378 A1	5/2007

OTHER PUBLICATIONS

International Search Report and Written Opinion issued in PCT/SE2012/050243 on Jun. 20, 2012.
(Continued)

Primary Examiner — Alexander Weddle
(74) *Attorney, Agent, or Firm* — Jeffrey S. Melcher; Manelli Selter PLLC

(57) **ABSTRACT**

The present invention relates to an applicator arrangement comprising base support arrangement, a supply unit for supply of coating liquid/slurry, an applicator device, and a metering device, wherein said supply unit comprises a distribution pipe which is supported on said support body by means of a bearing arrangement arranged to enable axial expansion and contraction of said distribution pipe.
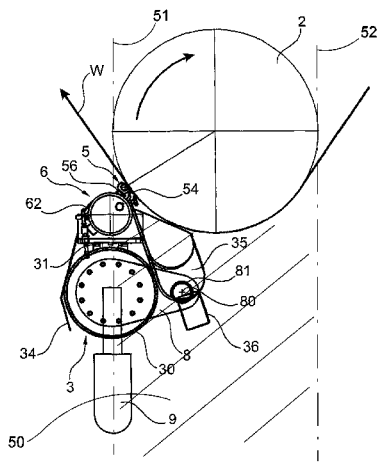
20 Claims, 8 Drawing Sheets