US009409005B2

(12) **United States Patent**
Moore

(10) **Patent No.: US 9,409,005 B2**
(45) **Date of Patent: Aug. 9, 2016**

(54) **APPARATUS AND METHOD FOR DEPLOYING A SURGICAL PREPARATION**

(71) Applicant: **Mark R. Moore**, Westlake, LA (US)

(72) Inventor: **Mark R. Moore**, Westlake, LA (US)

(*) Notice: Subject to any disclaimer, the term of this patent is extended or adjusted under 35 U.S.C. 154(b) by 85 days.

(21) Appl. No.: **14/312,498**

(22) Filed: **Jun. 23, 2014**

(65) **Prior Publication Data**

US 2014/0350489 A1 Nov. 27, 2014

Related U.S. Application Data

(63) Continuation-in-part of application No. 13/199,343, filed on Aug. 26, 2011, now Pat. No. 8,758,310, which is a continuation-in-part of application No. 11/602,542, filed on Nov. 21, 2006, now Pat. No. 8,403,898.

(51) **Int. Cl.**

A61H 35/00	(2006.01)
A61M 35/00	(2006.01)
A61B 19/00	(2006.01)
A61F 15/00	(2006.01)

(52) **U.S. Cl.**

CPC ***A61M 35/00*** (2013.01); ***A61B 19/36*** (2013.01); ***A61B 90/80*** (2016.02); ***A61F 15/004*** (2013.01); ***A61F 15/008*** (2013.01); ***A61H 35/00*** (2013.01); ***A61H 35/006*** (2013.01); *A61H 2201/0103* (2013.01); *A61H 2201/0111* (2013.01); *A61H 2201/1692* (2013.01); *A61H 2205/065* (2013.01); *A61H 2205/10* (2013.01)

(58) **Field of Classification Search**

CPC . A61M 35/00; A61M 35/003; A61M 35/006; A61M 37/00; A61H 35/00; A61H 35/006; A61H 35/008; A61B 19/12; A61B 19/36; A61B 19/38

USPC 604/289–293; 602/3, 79

See application file for complete search history.

(56) **References Cited**

U.S. PATENT DOCUMENTS

3,327,705	A *	6/1967	Spira	A61F 13/00063 424/443
5,312,385	A *	5/1994	Greco	A61B 19/12 128/DIG. 24
5,609,163	A *	3/1997	Beard	A61B 19/38 128/846
5,848,998	A *	12/1998	Marasco, Jr.	A61M 1/0019 604/289
6,635,035	B1 *	10/2003	Marasco	A61H 35/00 604/290
8,048,044	B2 *	11/2011	Stryker	A61H 9/005 601/17
8,206,363	B2 *	6/2012	Bainbridge	A61B 19/12 604/293
8,298,197	B2 *	10/2012	Eriksson	A61B 19/38 604/289
2012/0246820	A1 *	10/2012	Huynh	A61H 33/065 4/524

* cited by examiner

Primary Examiner — Lynne Anderson

(74) *Attorney, Agent, or Firm* — Schultz & Associates, P.C.

(57) **ABSTRACT**

A device used for applying an antiseptic preparation to a surgical site of a patient prior to surgery outside of an operating theater. A loose-fitting bag is provided which encloses the surgical site by securing the open end(s) to the patient by closing means. A high friction scrub surface is provided in the bag. A method and apparatus are also provided for releasing antiseptic into the interior of the bag. The method provides that the surgical site can be scrubbed within the bag so as to properly prepare the skin for surgery. A temperature indicator for the antiseptic preparation is also provided.
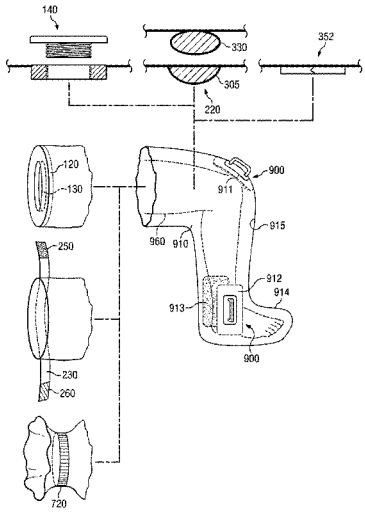
9 Claims, 8 Drawing Sheets