US009408705B2

(12) **United States Patent**
Oosthuizen

(10) **Patent No.: US 9,408,705 B2**
(45) **Date of Patent: Aug. 9, 2016**

(54) **TIBIAL COMPONENT**

(71) Applicant: **Christiaan Rudolf Oosthuizen**, Johannesburg (ZA)

(72) Inventor: **Christiaan Rudolf Oosthuizen**, Johannesburg (ZA)

(*) Notice: Subject to any disclaimer, the term of this patent is extended or adjusted under 35 U.S.C. 154(b) by 0 days.

(21) Appl. No.: **14/347,882**

(22) PCT Filed: **Sep. 28, 2012**

(86) PCT No.: **PCT/IB2012/055192**

§ 371 (c)(1),
(2) Date: **Mar. 27, 2014**

(87) PCT Pub. No.: **WO2013/046170**

PCT Pub. Date: **Apr. 4, 2013**

(65) **Prior Publication Data**

US 2014/0236308 A1 Aug. 21, 2014

(30) **Foreign Application Priority Data**

Sep. 29, 2011 (ZA) 2011/07123

(51) **Int. Cl.**
A61F 2/38 (2006.01)
A61F 2/30 (2006.01)

(52) **U.S. Cl.**
CPC . ***A61F 2/389*** (2013.01); ***A61F 2/38*** (2013.01); *A61F 2/3868* (2013.01); *A61F 2002/30607* (2013.01); *A61F 2002/30884* (2013.01); *A61F 2002/3895* (2013.01)

(58) **Field of Classification Search**
CPC A61F 2/38; A61F 2/289; A61F 2/2868; A61F 2002/30607; A61F 2002/30884; A61F 2/3872; A61F 2/389; A61F 2002/3895
USPC 623/20.27–20.34
See application file for complete search history.

(56) **References Cited**

U.S. PATENT DOCUMENTS

3,774,244 A * 11/1973 Walker A61F 2/38 623/20.3
4,158,684 A * 6/1979 Klawitter A61F 2/30767 264/261
4,728,332 A * 3/1988 Albrektsson A61F 2/3868 623/20.29
4,795,468 A 1/1989 Hodorek et al.

(Continued)

FOREIGN PATENT DOCUMENTS

EP 0032828 A2 7/1981
FR 2908039 A1 5/2008
GB 2245175 A 1/1992

OTHER PUBLICATIONS

International Preliminary Report on Patentability for International Application No. PCT/IB2012/055192 dated Jan. 17, 2014.

(Continued)

Primary Examiner — Alvin Stewart
(74) *Attorney, Agent, or Firm* — McDonnell Boehnen Hulbert & Berghoff LLP

(57) **ABSTRACT**

According to one aspect of the present invention, there is provided a tibial component (**10**), suitable for use in an orthopedic prosthesis, which prosthesis includes a femoral component and a spacer bearing (**70**), the tibial component comprising a planar tibial plate (**15**) having an upper bearing surface (**30**) and a lower attachment surface (**20**), and the tibial plate further having at least one spacer bearing attachment means for removably securing the spacer bearing to the tibial plate.
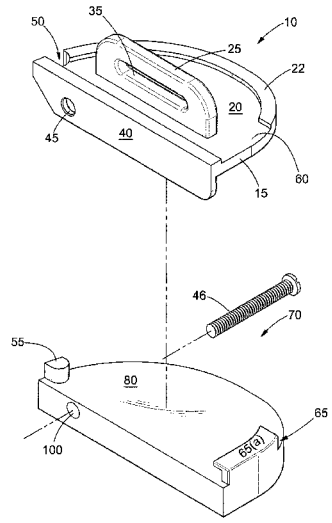
19 Claims, 6 Drawing Sheets