US009408605B1

(12) **United States Patent**
Knodel et al.

(10) **Patent No.: US 9,408,605 B1**
(45) **Date of Patent: Aug. 9, 2016**

(54) **SINGLE-TRIGGER CLAMPING AND FIRING OF SURGICAL STAPLER**

(75) Inventors: **Bryan D. Knodel**, Flagstaff, AZ (US); **Yaeer E. Lev**, Rolling Hills Estates, CA (US)

(73) Assignee: **Cardica, Inc.**, Redwood City, CA (US)

(*) Notice: Subject to any disclaimer, the term of this patent is extended or adjusted under 35 U.S.C. 154(b) by 956 days.

(21) Appl. No.: **13/451,344**

(22) Filed: **Jul. 12, 2012**

(51) **Int. Cl.**

A61B 17/068	(2006.01)
A61B 17/072	(2006.01)
A61B 17/29	(2006.01)
A61B 17/00	(2006.01)

(52) **U.S. Cl.**
CPC . ***A61B 17/07207*** (2013.01); *A61B 2017/00367* (2013.01); *A61B 2017/2923* (2013.01)

(58) **Field of Classification Search**
CPC A61B 17/07207; A61B 2017/2917; A61B 2017/2923; A61B 2017/292; A61B 2017/2922; A61B 2017/2915; A61B 2017/00367; A61B 2017/00407; A61B 2017/2919
See application file for complete search history.

(56) **References Cited**

U.S. PATENT DOCUMENTS

2,127,665	A	8/1938	Leslie
3,581,551	A	6/1971	Wilkinson
3,650,453	A	3/1972	Smith, Jr.
3,675,688	A	7/1972	Bryan et al.
3,717,294	A	2/1973	Green
3,837,555	A	9/1974	Green
3,899,914	A	8/1975	Akiyama
3,955,581	A	5/1976	Spasiano et al.
4,043,504	A	8/1977	Hueil et al.
4,086,926	A	5/1978	Green et al.
4,127,227	A	11/1978	Green
4,228,895	A	10/1980	Larkin
4,275,813	A	6/1981	Noiles et al.
4,475,679	A	10/1984	Fleury, Jr.
4,523,707	A	6/1985	Blake, III et al.
4,556,058	A	12/1985	Green
4,589,416	A	5/1986	Green
4,633,861	A	1/1987	Chow et al.
4,655,222	A	4/1987	Florez et al.
4,719,917	A	1/1988	Barrows et al.
4,762,260	A	8/1988	Richards et al.
4,969,591	A	11/1990	Richards et al.

(Continued)

FOREIGN PATENT DOCUMENTS

EP	1238634	9/1994
EP	1464287	10/2004

(Continued)

OTHER PUBLICATIONS

International Search Report, PCT/US2013/034593, mailed Jul. 18, 2013.
Gong, Shao W., "Perfectly flexible mechanism and integrated mechanism system design", *Mechanism and Machine Theory* 39 (2004), (Nov. 2004), 1155-1174.

(Continued)

Primary Examiner — Andrew M Tecco
(74) *Attorney, Agent, or Firm* — Womble Carlyle Sandridge & Rice LLP

(57) **ABSTRACT**

An exemplary surgical apparatus includes an end effector; and a handle operationally connected to the end effector, the handle including a trigger and a mode button; where the mode button is first in a neutral position in which actuation of the trigger causes the end effector to move to a clamped configuration; and where the mode button is movable laterally to a second position in which actuation of the trigger causes the end effector to deploy staples.
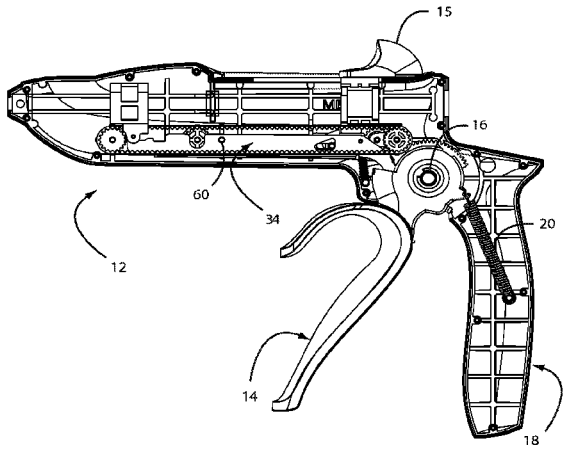
16 Claims, 14 Drawing Sheets