US005199104A

# United States Patent [19]

Hirayama

[11] Patent Number: 5,199,104

[45] Date of Patent: Mar. 30, 1993

[54] ELECTRONIC ORGANIZER WITH ELECTRONIC BOOK MARKER

[75] Inventor: Tomoshi Hirayama, Tokyo, Japan

[73] Assignee: Sony Corporation, Tokyo, Japan

[21] Appl. No.: 440,258

[22] Filed: Nov, 22, 1989

[30] Foreign Application Priority Data

Dec. 15, 1988 [JP] Japan ..... 63-316838
Dec. 27, 1988 [JP] Japan ..... 63-330138

[51] Int. Cl.[5] ..... G06F 15/20
[52] U.S. Cl. ..... 395/145
[58] Field of Search ..... 364/705.06, 705.07, 364/705.08, 709.12; 395/145, 155, 156

[56] References Cited

U.S. PATENT DOCUMENTS

4,715,010 12/1987 Inoue et al. ..... 364/705.06
4,890,258 12/1989 Tsugei et al. ..... 364/900
4,912,640 3/1990 Tsugei ..... 364/400
5,008,854 4/1991 Maeda et al. ..... 364/705.06 X

FOREIGN PATENT DOCUMENTS

0251477 1/1988 European Pat. Off. .
3520894 12/1985 Fed. Rep. of Germany .
WO89/01658 2/1989 PCT Int'l Appl. .
2183886 12/1985 United Kingdom .

OTHER PUBLICATIONS

"Selecting a Daily Calendar From a Monthly Calendar", J. P. Vincent and M. E. Weidmann, IBM Technical Disclosure Bulletin, vol. 26, No. 8, Jan. 1984.

*Primary Examiner*—Heather R. Herndon
*Attorney, Agent, or Firm*—Hill, Steadman & Simpson

[57] ABSTRACT

A portable computer has incorporated therein a central processing unit, a display apparatus and a timer circuit. This portable computer is also provided with exclusive operation keys, wherein image data corresponding to a predetermined condition can be displayed on the display apparatus only by depressing the predetermined exclusive operation key and schedule data judged from a date of present time point can also be displayed on the display apparatus only be depressing the predetermined exclusive operation key.
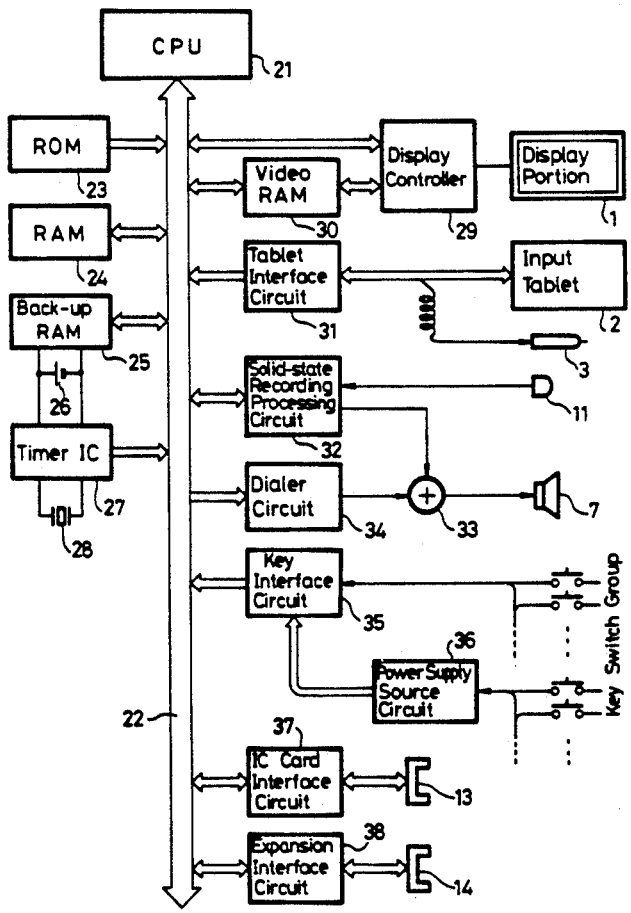
5 Claims, 5 Drawing Sheets