United States Patent [19]

Kishimoto et al.

[11] **4,395,704**

[45] **Jul. 26, 1983**

[54] **INPUT DEVICE FOR ELECTRONIC APPARATUS**

[75] Inventors: **Juji Kishimoto; Ichiro Sado,** both of Tokyo; **Mitsuo Cho,** Ina, all of Japan

[73] Assignee: **Canon Kabushiki Kaisha,** Tokyo, Japan

[21] Appl. No.: **304,311**

[22] Filed: **Sep. 21, 1981**

Related U.S. Application Data

[63] Continuation of Ser. No. 82,536, Oct. 9, 1979, abandoned.

[30] **Foreign Application Priority Data**

Oct. 14, 1978 [JP] Japan 53-125716

[51] **Int. Cl.**[3] **G08C 9/00;** G06F 13/00

[52] **U.S. Cl.** ..... **340/365 S;** 340/365 R; 364/709

[58] **Field of Search** ..... 340/365 S, 365 R; 364/709, 710, 705, 708; 179/90 K; 178/17 C

[56] **References Cited**

U.S. PATENT DOCUMENTS

3,940,758	2/1976	Margolin	364/708
4,099,246	7/1978	Osborne et al.	340/365 R
4,117,542	9/1978	Klausner et al.	364/709
4,120,036	10/1978	Maeda et al.	364/705
4,122,526	10/1978	Dlugos et al.	364/705

Primary Examiner—Donnie L. Crosland

Attorney, Agent, or Firm—Fitzpatrick, Cella, Harper & Scinto

[57] **ABSTRACT**

An input device for electronic apparatus includes key signal output lines each having plural key switches connected thereto and circuitry for separating the key signals into specific key signals thereby identifying the plural key switches.
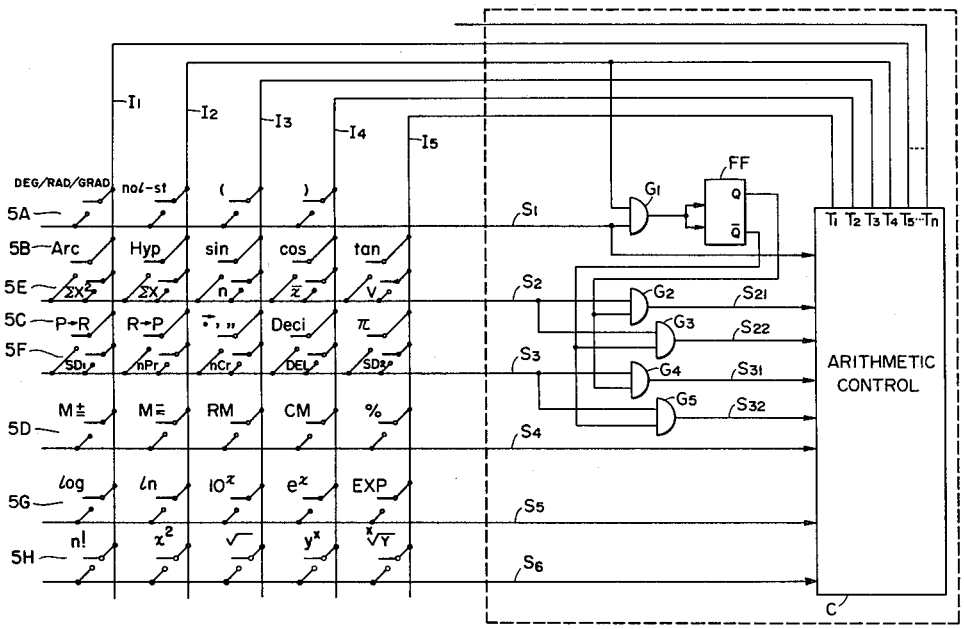
2 Claims, 5 Drawing Figures