United States Patent

[11] 3,595,204

[72] Inventors Donald B. McIntyre;
Frederic S. McIntyre, both of Wellesley Hills, Mass.

[21] Appl. No. 530
[22] Filed Jan. 5, 1970
[45] Patented July 27, 1971
[73] Assignee Acumeter Laboratories, Inc.
Newton, Mass.

[54] **FLUID APPLICATOR APPARATUS**
23 Claims, 4 Drawing Figs.

[52] U.S. Cl. 118/8, 239/70
[51] Int. Cl. B05c 11/10
[50] Field of Search 118/8, 259, 302, 324; 239/67, 69, 70

[56] **References Cited**

UNITED STATES PATENTS

2,730,989	1/1956	Pearce	118/259 X
3,016,447	1/1962	Gage et al.	118/302 X
3,152,923	10/1964	Marshall et al.	118/324 X
3,259,323	7/1966	Sanders	239/70 X
3,290,167	12/1966	Woods et al.	118/8 X

Primary Examiner—Louis K. Rimrodt
Attorney—Rines and Rines
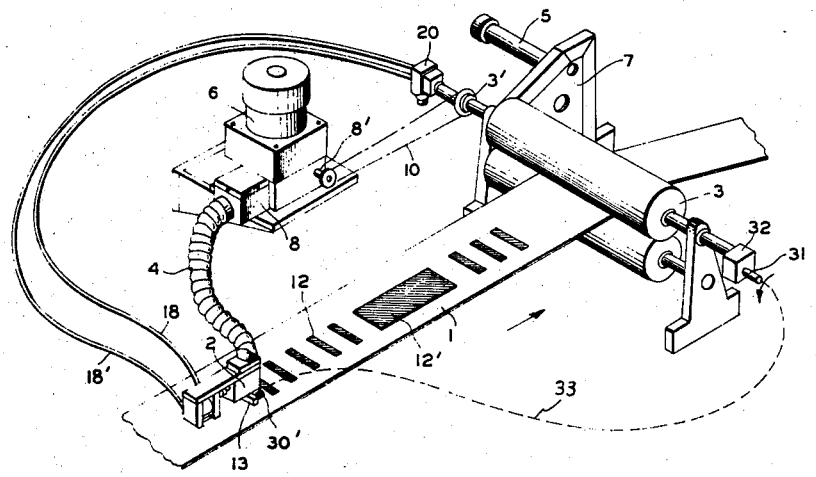
ABSTRACT: The present disclosure deals with fluid applicator apparatus wherein a substantially uniform fluid flow is produced through novel lateral-expansion nozzle design for such purposes as the intermittent application of fluid deposits upon moving sheets or articles.