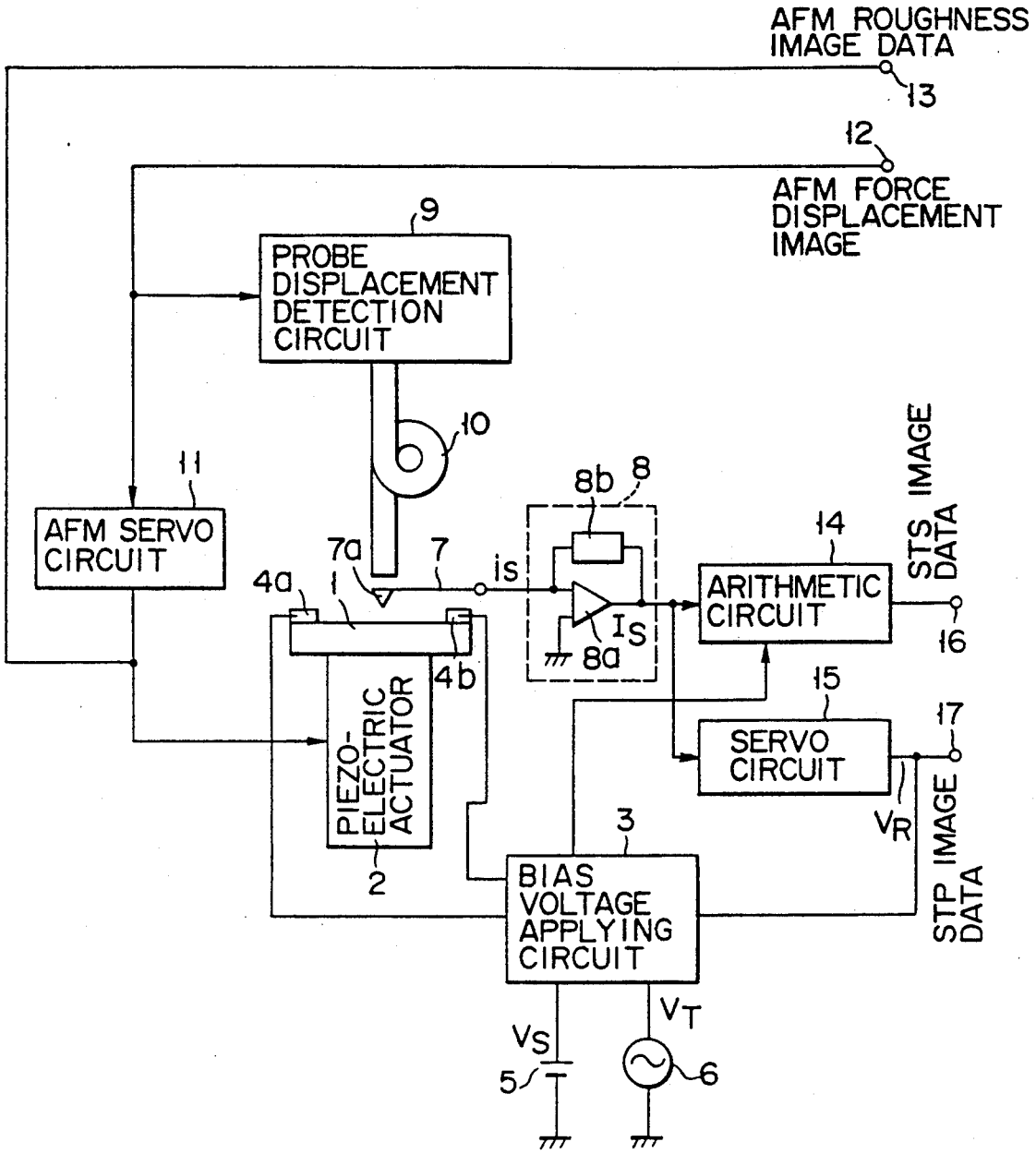
AFM ROUGHNESS IMAGE DATA
13
12
AFM FORCE DISPLACEMENT IMAGE
9
PROBE DISPLACEMENT DETECTION CIRCUIT
10
11
AFM SERVO CIRCUIT
8b
8
7a
7
is
4a
4b
Is
8a
14
ARITHMETIC CIRCUIT
STS IMAGE DATA
16
15
SERVO CIRCUIT
17
VR
STP IMAGE DATA
PIEZO-ELECTRIC ACTUATOR
2
3
BIAS VOLTAGE APPLYING CIRCUIT
VS
5
VT
6

FIG. 1