Dec. 18, 1934. F. E. STAHL 1,984,604

HOIST DRUM
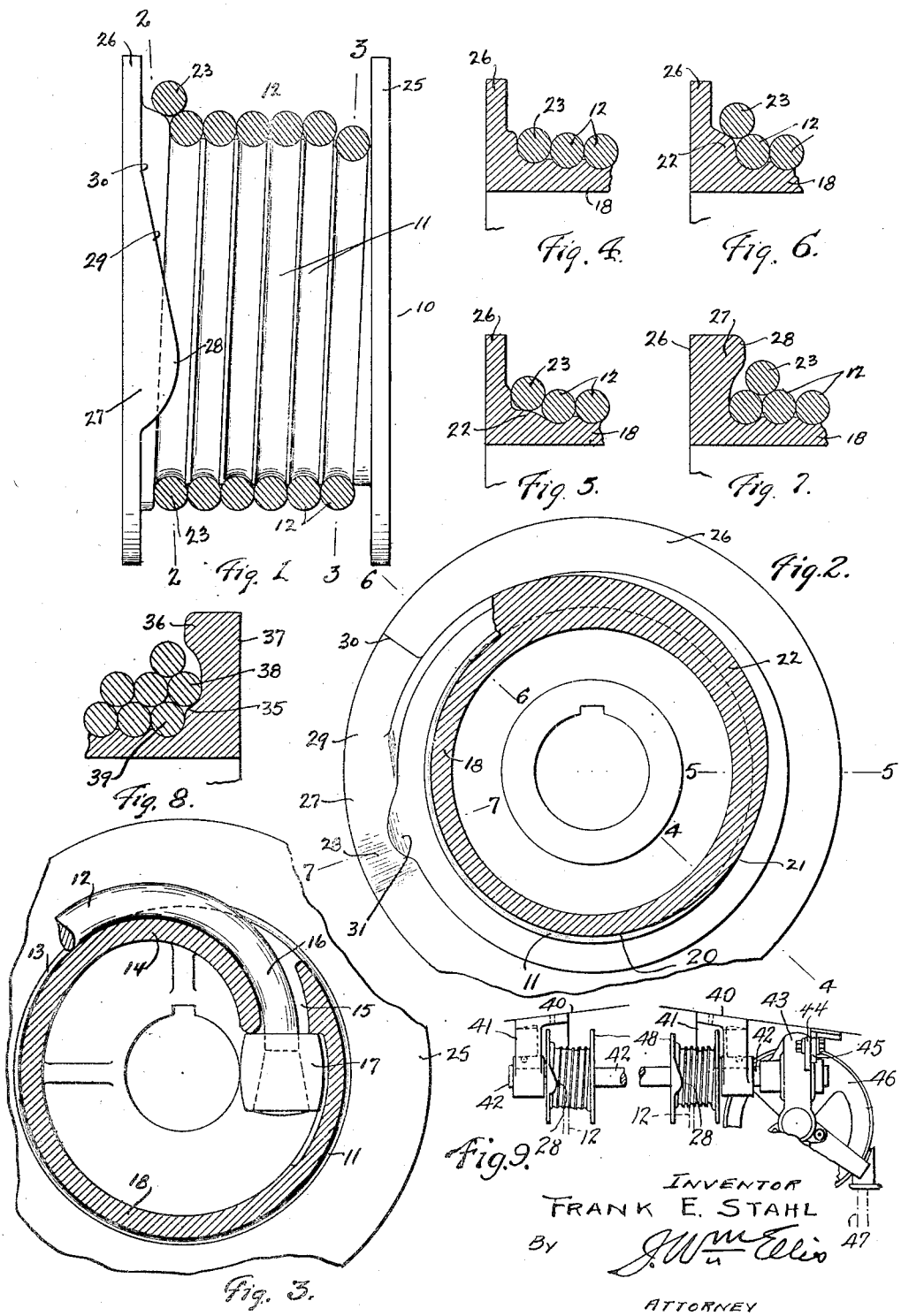
Filed Jan. 21, 1933