FIG. 1

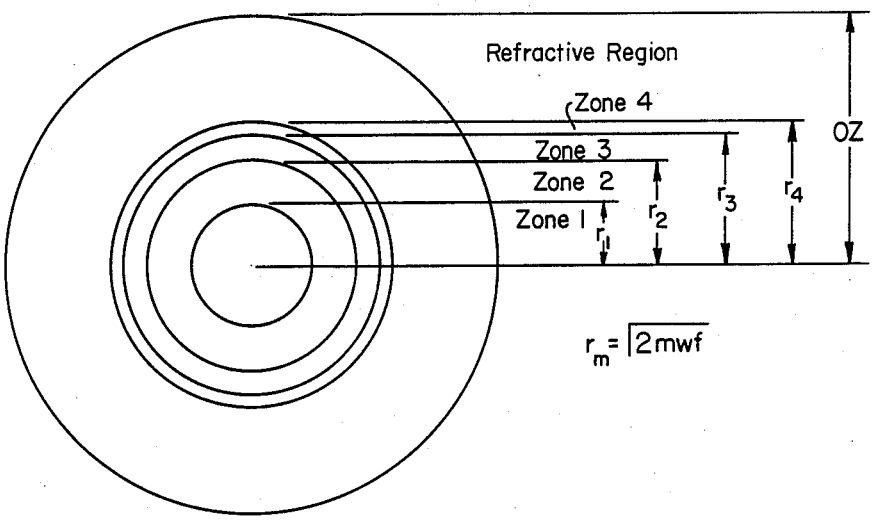


FIG. 2

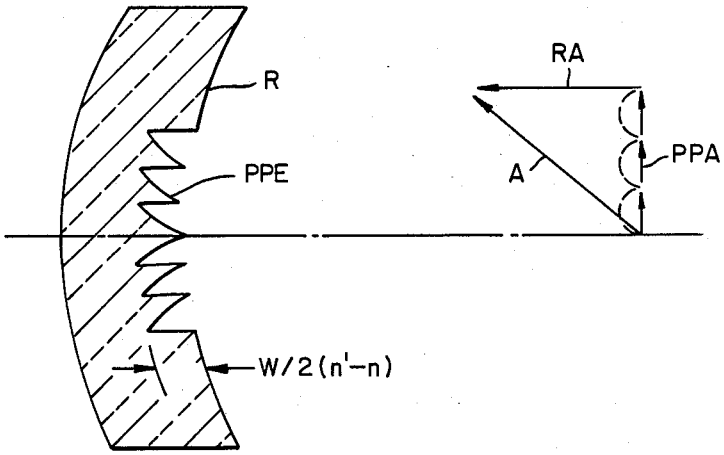


FIG. 5A

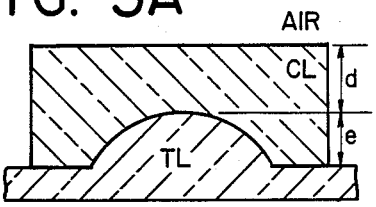


Lens with no drapage

FIG. 5B

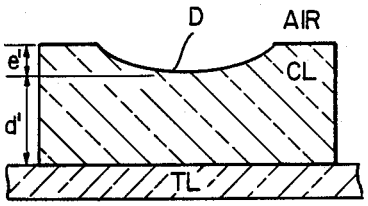


Lens undergoing drapage