United States Patent [19]

Cohen

[11] **Patent Number: 4,881,804**

[45] **Date of Patent: Nov. 21, 1989**

[54] **MULTIFOCAL PHASE PLATE WITH A PURE REFRACTIVE PORTION**

[76] Inventor: **Allen L. Cohen,** 10010 Walsham Ct., Richmond, Va. 23233

[21] Appl. No.: **120,265**

[22] Filed: **Nov. 12, 1987**

[51] **Int. Cl.**[4] **G02C 7/04;** G02B 5/18; G02B 27/44

[52] **U.S. Cl.** **351/161;** 350/162.16; 350/162.22

[58] **Field of Search** ..... 351/160 R, 160 H, 161, 351/162, 162.16, 162.22

[56] **References Cited**

U.S. PATENT DOCUMENTS

3,309,162	3/1967	Kosanke et al.	350/162.16 X
3,312,519	4/1967	Max	350/162.16 X
3,728,009	4/1973	Fadotowsky et al.	350/162.16
4,198,132	4/1980	Seger et al.	351/160 H
4,210,391	7/1980	Cohen	351/161
4,338,005	7/1982	Cohen	351/161
4,340,283	7/1982	Cohen	351/161
4,637,697	1/1987	Freeman	351/161
4,641,934	2/1987	Freeman	351/161 X
4,655,565	4/1987	Freeman	351/161 X

Primary Examiner—Scott J. Sugarman
Attorney, Agent, or Firm—Finnegan, Henderson, Farabow, Garrett & Dunner

[57] **ABSTRACT**

An ophthalmic contact lens with a phase plate and a pure refractive portion within its optic zone. The invention embraces an ophthalmic contact lens of the Cohen lens design with a phase plate and a pure refractive portion within its optic zone.
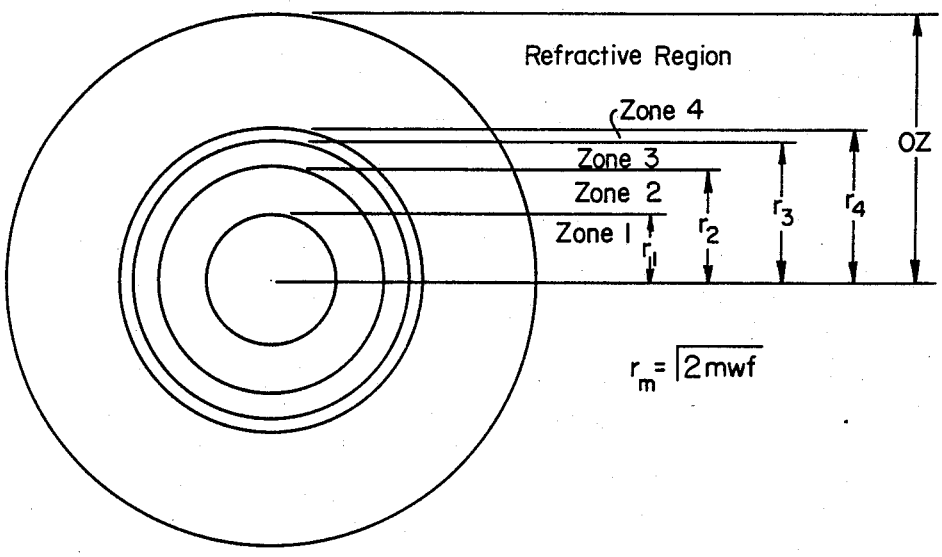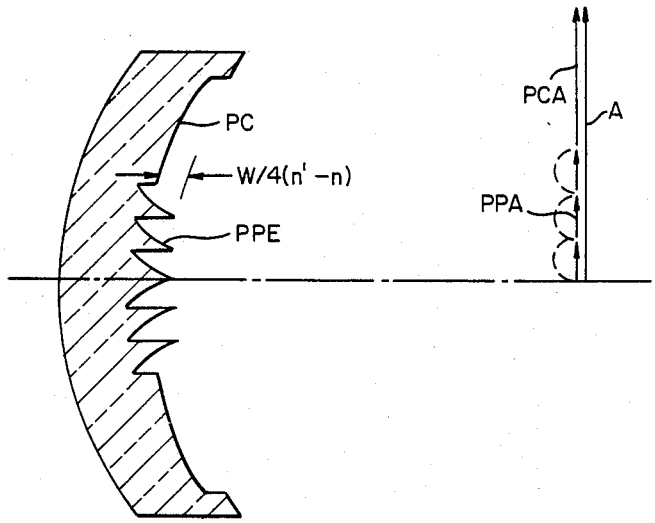
34 Claims, 4 Drawing Sheets