US009463004B2

(12) **United States Patent**
Campbell et al.

(10) **Patent No.: US 9,463,004 B2**
(45) **Date of Patent: Oct. 11, 2016**

(54) **BIOMATERIALS FOR TRACK AND PUNCTURE CLOSURE**

(75) Inventors: **Patrick Campbell**, Wayland, MA (US); **Amarpreet S. Sawhney**, Lexington, MA (US)

(73) Assignee: **Incept, LLC.**, Lexington, MA (US)

(*) Notice: Subject to any disclaimer, the term of this patent is extended or adjusted under 35 U.S.C. 154(b) by 382 days.

(21) Appl. No.: **12/773,326**

(22) Filed: **May 4, 2010**

(65) **Prior Publication Data**

US 2010/0280546 A1 Nov. 4, 2010

Related U.S. Application Data

(60) Provisional application No. 61/175,220, filed on May 4, 2009, provisional application No. 61/265,977, filed on Dec. 2, 2009.

(51) **Int. Cl.**
A61B 17/03 (2006.01)
A61B 17/00 (2006.01)

(52) **U.S. Cl.**
CPC .. ***A61B 17/0057*** (2013.01); *A61B 2017/00004* (2013.01); *A61B 2017/0065* (2013.01); *A61B 2017/00654* (2013.01)

(58) **Field of Classification Search**
CPC A61B 17/0057; A61B 2017/0065; A61B 2017/00654; A61B 2017/00676; A61B 2017/00646; A61B 2017/00623; A61B 2017/00601
USPC 606/213
See application file for complete search history.

(56) **References Cited**

U.S. PATENT DOCUMENTS

2,115,492	A	4/1938	Kober
3,765,419	A	10/1973	Usher
4,002,173	A	1/1977	Manning
4,260,077	A	4/1981	Schroeder
4,327,709	A	5/1982	Hanson et al.
4,362,150	A	12/1982	Lombardi, Jr. et al.
4,472,542	A	9/1984	Nambu
4,540,404	A	9/1985	Wolvek
4,655,211	A	4/1987	Sakamoto et al.
4,664,857	A	5/1987	Nambu
4,734,097	A	3/1988	Tanabe et al.
4,738,658	A	4/1988	Magro et al.
4,826,945	A	5/1989	Cohn et al.
4,838,280	A	6/1989	Haaga

(Continued)

FOREIGN PATENT DOCUMENTS

EP	0476178	3/1992
EP	0482350	4/1992

(Continued)

OTHER PUBLICATIONS

Gander et al., "Crosslinked Poly(alkylene Oxides) for the Preparation of Controlled Release Micromatrices", Journal of Controlled Release, 5:271-283 (1988).

(Continued)

Primary Examiner — Julian W Woo
Assistant Examiner — Shaun L David
(74) *Attorney, Agent, or Firm* — Dardi & Herbert, PLLC; Curtis B. Herbert

(57) **ABSTRACT**

Embodiments include coatings for adherence of biomaterials to a tissue. Systems and methods for adapting such coated materials to vascular access closure are further proved.
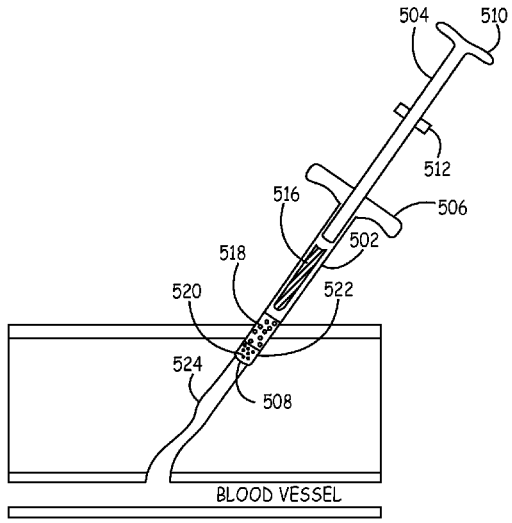
28 Claims, 25 Drawing Sheets