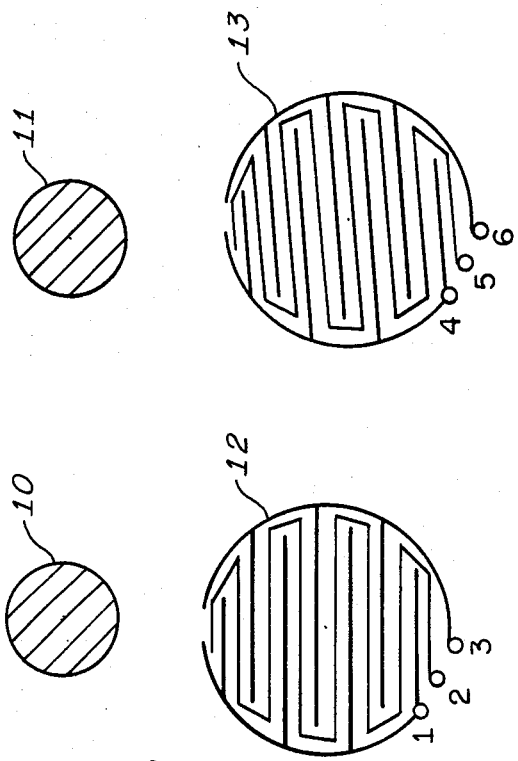

FIG. 2B.
PRIOR ART

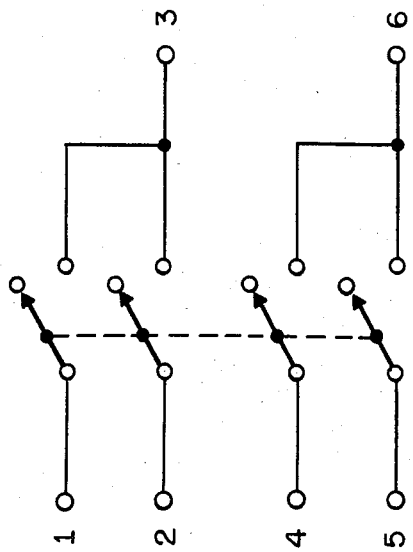

FIG. 1.

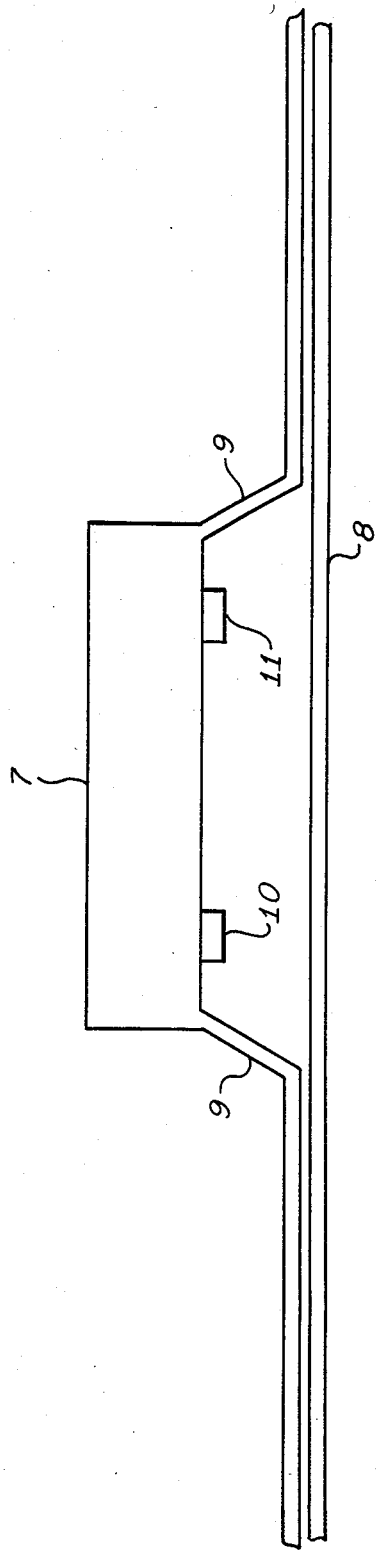

FIG. 2A.
PRIOR ART