United States Patent [19]

Zimmerly et al.

[11] **Patent Number: 4,850,704**

[45] **Date of Patent: Jul. 25, 1989**

[54] **TWO STAGE BLENDER**

[75] Inventors: **Robert D. Zimmerly; Robert J. Riemer,** both of Kenosha, Wis.

[73] Assignee: **Ladish Co.**

[21] Appl. No.: **161,300**

[22] Filed: **Feb. 25, 1988**

Related U.S. Application Data

[63] Continuation-in-part of Ser. No. 901,366, Aug. 28, 1986, abandoned.

[51] **Int. Cl.**[4] **B01F 7/04**

[52] **U.S. Cl.** **366/263;** 366/264; 366/290; 366/293

[58] **Field of Search** 366/176, 263–265, 366/279, 290–295, 317; 415/199.1, 199.2

[56] **References Cited**

U.S. PATENT DOCUMENTS

1,109,133	9/1914	Melchers	415/199.1
1,976,955	10/1934	MacLean	366/264
2,882,149	4/1959	Willems	366/253
2,910,223	10/1959	Schlumbohm	415/199.1
3,400,915	9/1968	Onishi et al.	366/290
3,606,270	9/1971	Zimmerly	366/263
3,679,182	7/1972	Clocker	366/263
3,959,838	6/1976	Hannah	15/1.7
4,277,223	7/1981	Nelson	415/199.1
4,400,219	8/1983	Vanderputten et al.	366/293
4,729,663	3/1988	Karg	366/264

Primary Examiner—Harvey C. Hornsby
Assistant Examiner—Corinne M. Reinckens
Attorney, Agent, or Firm—Fuller, Puerner & Hohenfeldt

[57] **ABSTRACT**

A two stage blender is capable of handling high viscosity liquid-powder mixtures. The mixture discharged from the first stage is directed to the second stage, from which it is discharged at a relatively high discharge pressure. The second stage further enhances the natural vacuum created within the first stage, so that powder is fed at a constant ratio for a wide variety of liquid flows. Selected internal parts of the blender are designed to permit cleaning the blender in place.
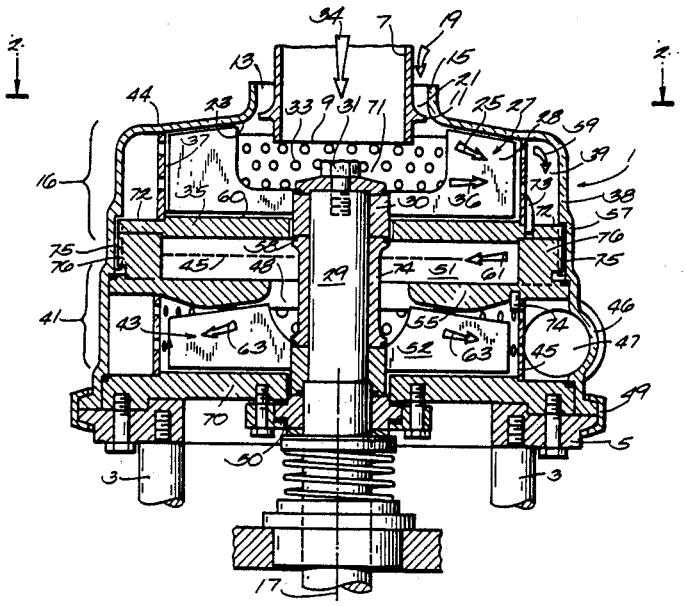
12 Claims, 6 Drawing Sheets