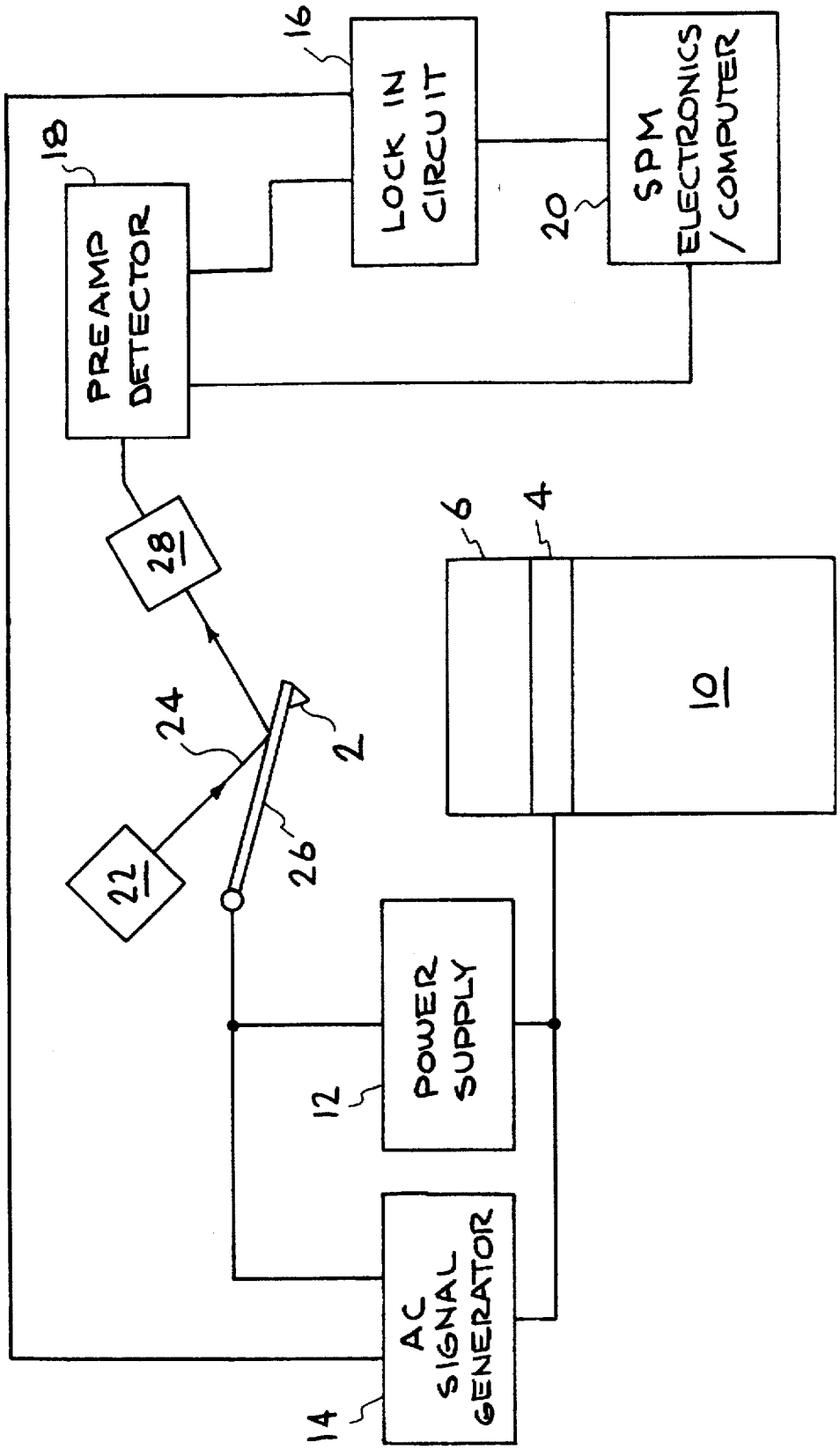
16
LOCK IN CIRCUIT
18
PREAMP DETECTOR
20
SPM ELECTRONICS / COMPUTER
28
6
4
10
24
2
22
26
POWER SUPPLY
12
AC SIGNAL GENERATOR
14

FIG. 1