United States Patent [19]

Kornfeld

[11] **Patent Number: 4,741,604**

[45] **Date of Patent: May 3, 1988**

[54] **ELECTRODE ARRAYS FOR CELLULAR DISPLAYS**

[76] Inventor: **Cary D. Kornfeld,** 232 Mountain Ave., Murray Hill, N.J. 07974

[21] Appl. No.: **697,344**

[22] Filed: **Feb. 1, 1985**

[51] **Int. Cl.**[4] **G02B 26/02**

[52] **U.S. Cl.** **350/362**

[58] **Field of Search** 350/362, 332; 204/209; 340/713, 763, 783, 787, 805

[56] **References Cited**

U.S. PATENT DOCUMENTS

3,657,091	4/1972	Forest	204/181
3,668,106	6/1972	Ota	204/299
4,068,927	1/1978	White	350/160 R
4,071,430	1/1978	Liebert	204/299 R
4,126,528	11/1978	Chiang	204/180 R
4,187,160	2/1980	Zimmermann	204/180 R
4,218,302	8/1980	Dalisa et al.	204/299 R
4,241,344	12/1980	Kmetz et al.	350/332
4,285,801	8/1981	Chiang	204/299 R

Primary Examiner—Bruce Y. Arnold

[57] **ABSTRACT**

An electric flat panel display has a matrix of flat panel display cells and a fault tolerant driver circuit and an electrode array. A folded field drive scheme applies a periodic voltage signal to a common electrode. Opposing electrodes are set to one of two voltage states by voltage setting circuits.
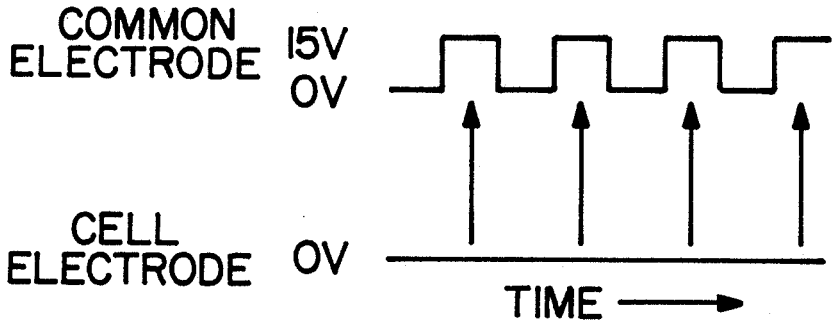
4 Claims, 3 Drawing Sheets