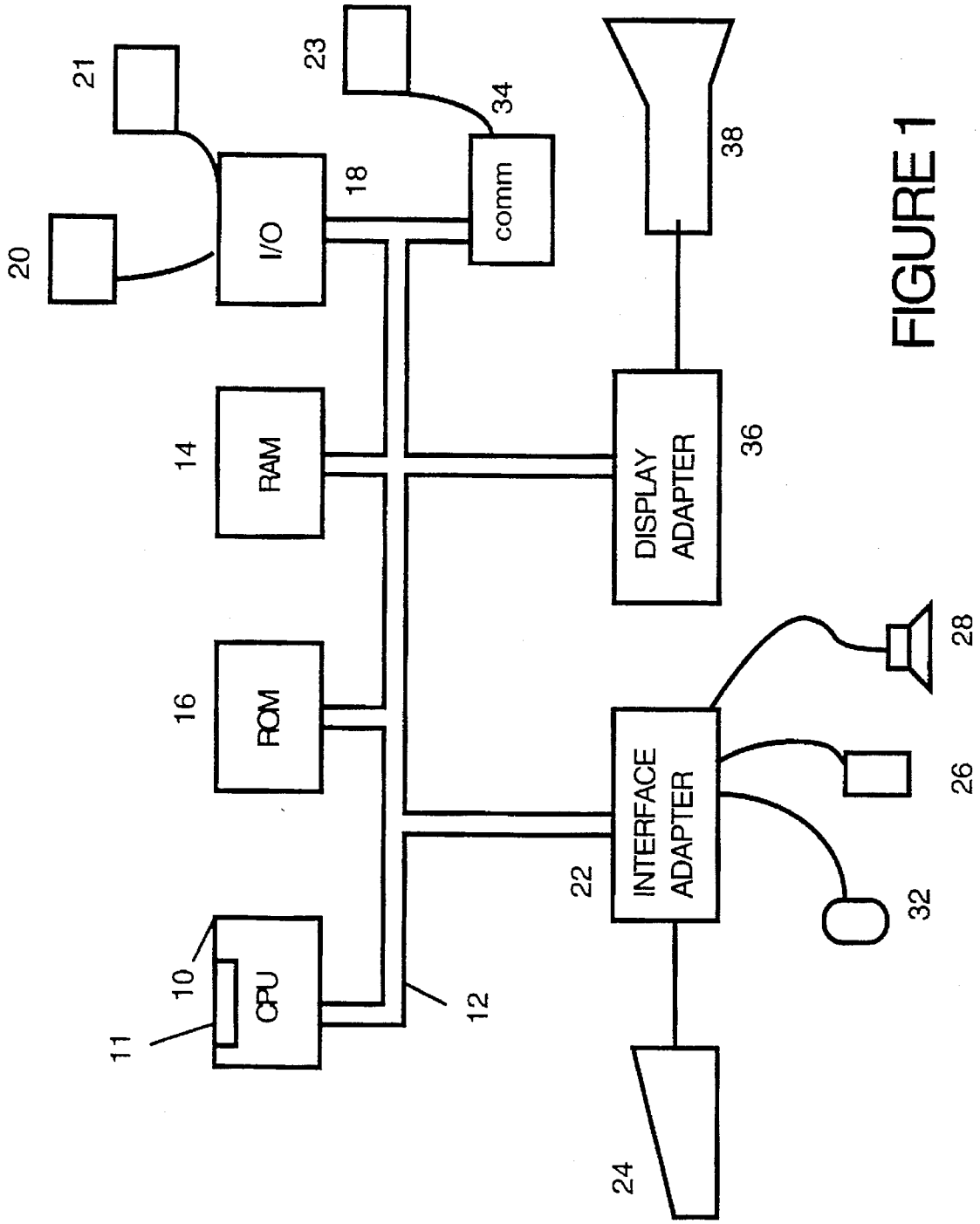
CPU
10
11
12
ROM
16
RAM
14
I/O
18
20
21
comm
34
23
INTERFACE ADAPTER
22
DISPLAY ADAPTER
36
38
24
26
28
32

FIGURE 1