March 18, 1941. D. L. GORBATENKO ET AL 2,235,704

TAPING INSTRUMENT

Filed Dec. 12, 1938

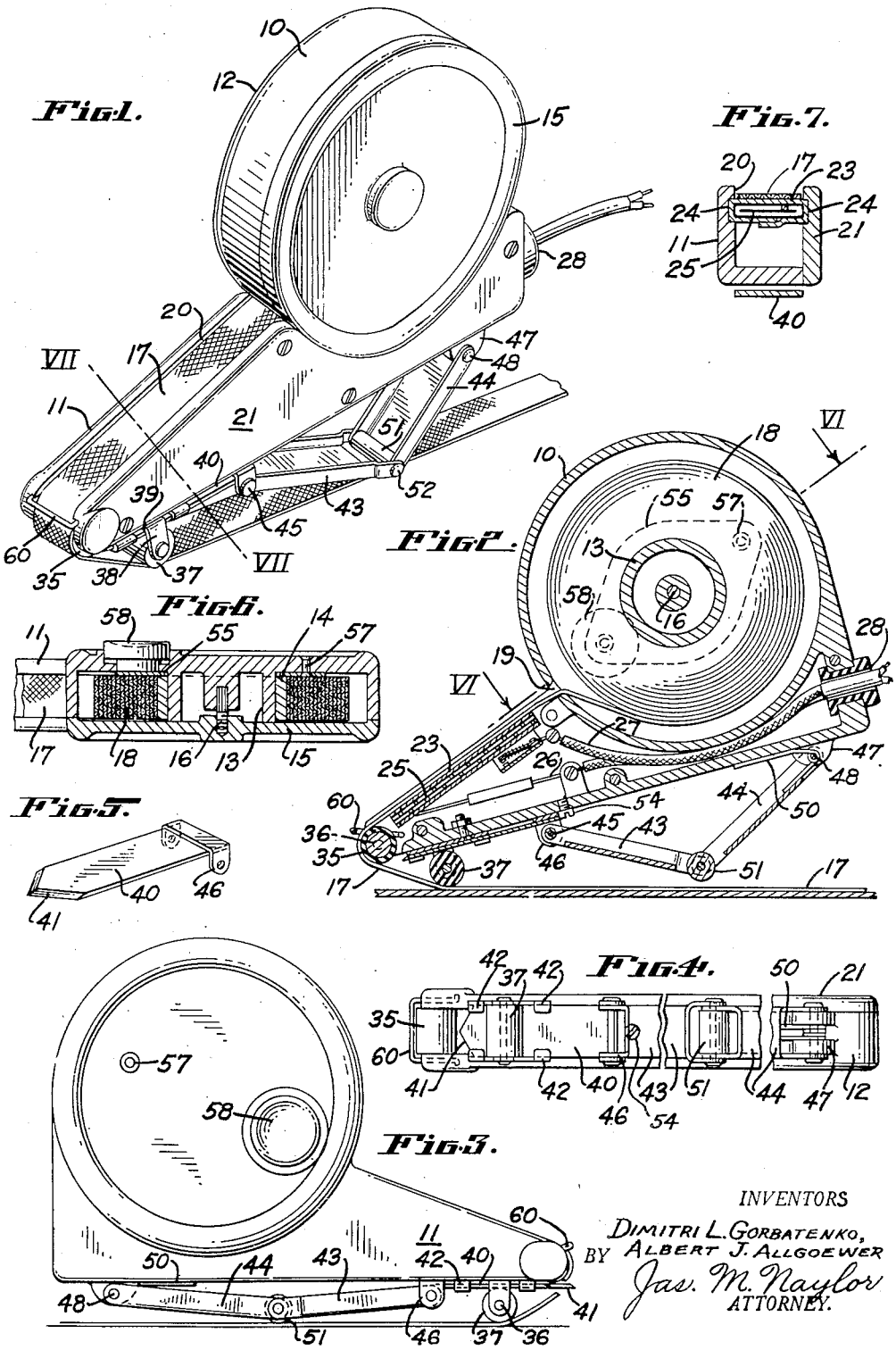

INVENTORS

DIMITRI L. GORBATENKO,

BY ALBERT J. ALLGOEWER

Jas. M. Naylor

ATTORNEY.