United States Patent [19]

Szycher

[11] **4,131,604**

[45] **Dec. 26, 1978**

[54] **POLYURETHANE ELASTOMER FOR HEART ASSIST DEVICES**

[75] Inventor: **Michael Szycher**, Peabody, Mass.

[73] Assignee: **Thermo Electron Corporation**, Waltham, Mass.

[21] Appl. No.: **854,274**

[22] Filed: **Nov. 23, 1977**

[51] **Int. Cl.**[2] **C08G 18/48**

[52] **U.S. Cl.** ..... **528/79**; 3/1; 3/1.7; 128/1 D; 264/311; 264/328; 528/76; 528/65

[58] **Field of Search** ..... 3/1, 1.7; 128/1 D; 264/311, 328; 260/77.5 AP, 77.5 AM

[56] **References Cited**

U.S. PATENT DOCUMENTS

2,808,391	10/1957	Pattison	260/77.5 AM
2,808,967	10/1957	Miller	264/311
2,865,940	12/1958	Nobis et al.	260/77.5 AT
2,866,774	12/1958	Price	260/77.5 AP
2,899,411	8/1959	Schollenberger	260/77.5 AP
2,929,800	3/1960	Hill	260/77.5 AP
2,948,691	8/1960	Windemuth et al.	260/77.5 AP
3,130,175	4/1964	Peter et al.	260/77.5 AM
3,487,050	12/1969	Castro et al.	260/77.5 AT
3,512,183	5/1970	Sharp et al.	3/1 D
3,562,352	2/1971	Nyilas	3/1.7
3,604,016	9/1971	Robinson et al.	3/1 AH
3,746,683	7/1973	Salyer et al.	260/77.5 AP
3,798,200	3/1974	Kancko et al.	260/77.5 AM
3,804,812	4/1974	Koroscil	260/77.5 AM
3,939,021	2/1976	Nishibayashi et al.	260/77.5 AT

Primary Examiner—M. J. Welsh
Attorney, Agent, or Firm—Kenway & Jenney

[57] **ABSTRACT**

Rubbery reaction products of an aliphatic organic diisocyanate, a high molecular weight polyether polyol (poly tetra methylene ether glycol), a low molecular weight glycol chain extender and a polyhydic alcohol crossliker such as trimethylol propane. The resulting polymers have improved thromboresistant properties and a long flexural life.

Bladders for heart pumps may be formed from the resulting polymer, and a novel process for forming bladders for heart pumps is disclosed.
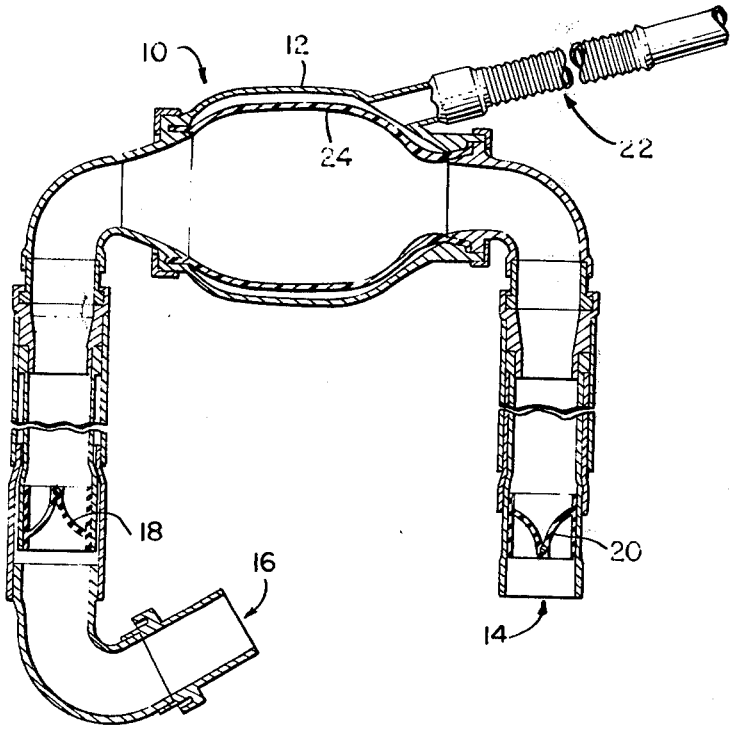
22 Claims, 2 Drawing Figures