US007130004B2

(12) **United States Patent**
Kela et al.

(10) **Patent No.: US 7,130,004 B2**
(45) **Date of Patent: Oct. 31, 2006**

(54) **DISPLAY ARRANGEMENT**

(75) Inventors: **Jukka Kela**, Hellerup (DK); **Stefan Olsen**, Bronshoj (DK); **Helle Baarup Lundsgaard**, Copenhagen (DK)

(73) Assignee: **Nokia Corporation**, Espoo (FI)

(*) Notice: Subject to any disclaimer, the term of this patent is extended or adjusted under 35 U.S.C. 154(b) by 0 days.

(21) Appl. No.: **10/086,737**

(22) Filed: **Mar. 4, 2002**

(65) **Prior Publication Data**

US 2003/0164918 A1 Sep. 4, 2003

(51) **Int. Cl.**
G02F 1/1333 (2006.01)

(52) **U.S. Cl.** **349/58**; 349/60; 349/150

(58) **Field of Classification Search** 349/58, 349/60, 16, 14, 150
See application file for complete search history.

(56) **References Cited**

U.S. PATENT DOCUMENTS

5,659,376 A * 8/1997 Uehara et al. 349/58
5,808,707 A * 9/1998 Niibori et al. 349/58
5,838,401 A 11/1998 Uehara
6,064,453 A * 5/2000 Inubushi et al. 349/58
6,216,329 B1 * 4/2001 Kaga et al. 29/458
6,352,322 B1 * 3/2002 Nakao 312/223.1
6,608,664 B1 * 8/2003 Hasegawa 349/160
2001/0007485 A1 7/2001 Kaga et al.

FOREIGN PATENT DOCUMENTS

EP 0638832 2/1995
EP 0730185 9/1996

OTHER PUBLICATIONS

Patent Abstract of Japan, Publ. No. 02093425-Publ. Date Apr. 4, 1990.

* cited by examiner

Primary Examiner—Dung T. Nguyen
Assistant Examiner—Thoi V. Duong
(74) *Attorney, Agent, or Firm*—Alston & Bird LLP

(57) **ABSTRACT**

The invention relates to a display arrangement for establishing a flexible mounting of a liquid crystal display (LCD) module in an electronic equipment for minimize the impact on the LCD module of externally applied forces on the electronic equipment, e.g. dropping the electronic equipment. This is managed by having a gap between the LCD and the surrounding mechanics in the electronic equipment. The LCD module is positioned in relation to the surrounding mechanics by provisions of elastic and adhesive members between the LCD module and the surrounding mechanics in the electronic equipment.
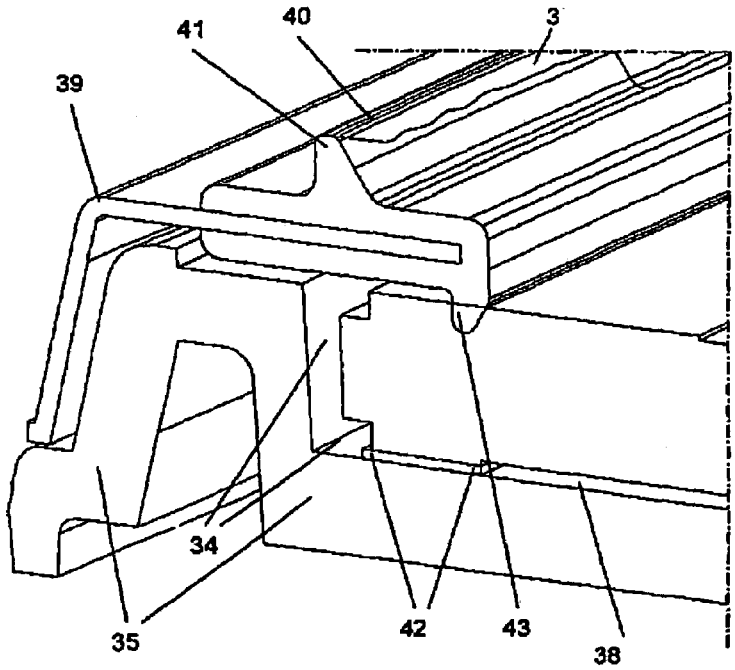
18 Claims, 3 Drawing Sheets