INSTANT COFFEE FLAKES

Filed Dec. 4, 1968

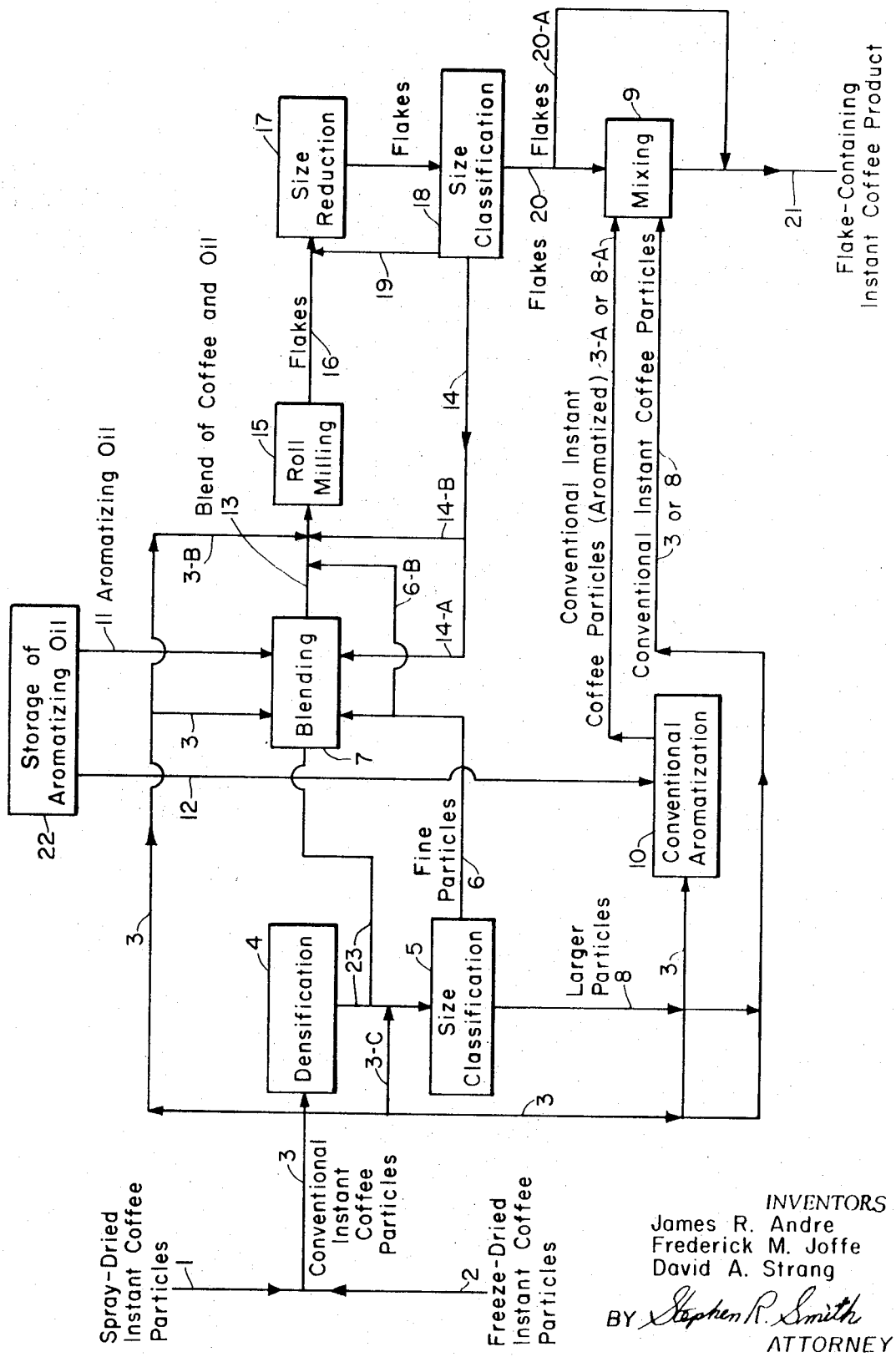

INVENTORS
James R. Andre
Frederick M. Joffe
David A. Strang
BY Stephen R. Smith
ATTORNEY