FIG. 1.

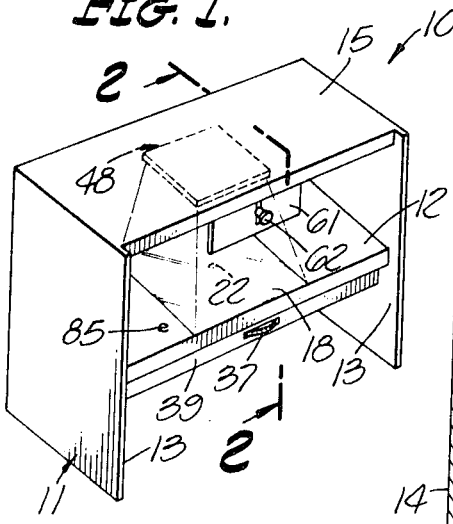

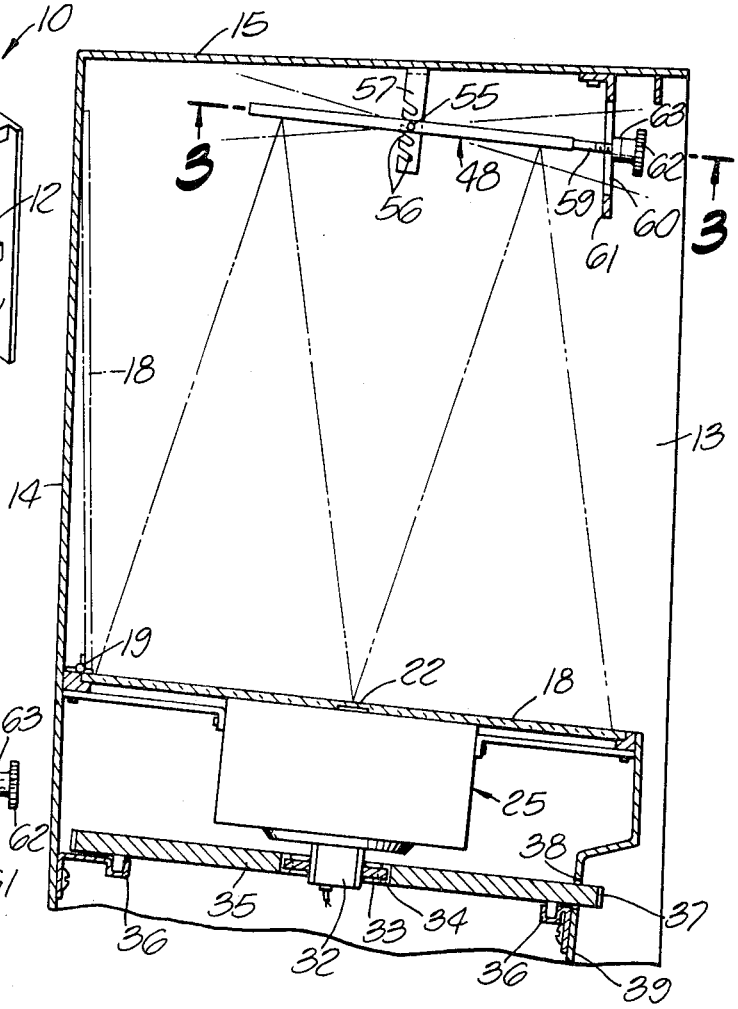

FIG. 2.

FIG. 3.

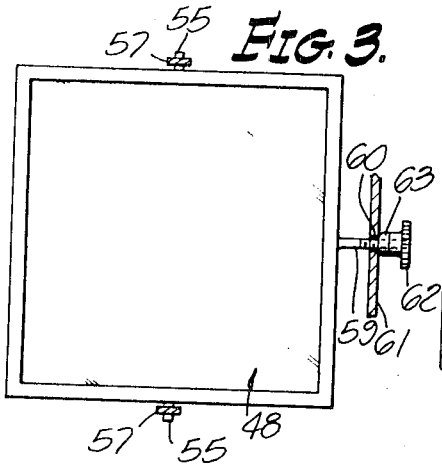

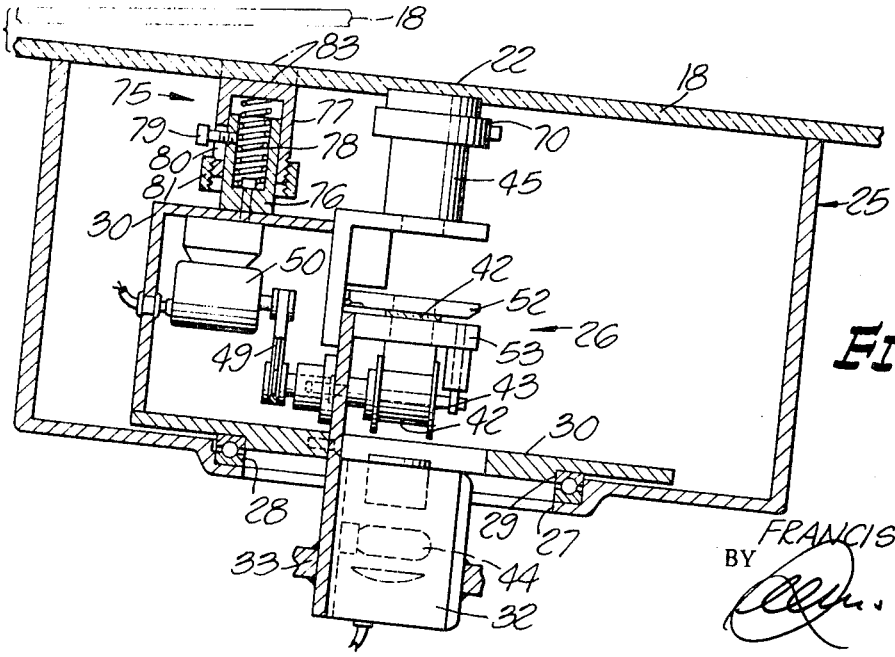

FIG. 4.

INVENTOR
FRANCIS F. SPREITZER
BY
ATTORNEYS