US005316704A

United States Patent [19]

Wang et al.

[11] Patent Number: 5,316,704

[45] Date of Patent: May 31, 1994

[54] PROCESS FOR FABRICATING FULL SIZED EXPANSILE HYDROGEL INTRAOCULAR LENSES

[75] Inventors: **Yading Wang**, Arcadia; **Stephen O. Zhou**, Hacienda Heights; **Thomas P. Richards**, Los Angeles, all of Calif.

[73] Assignee: **Kabi Pharmacia Ophthalmics Inc.**, Monrovia, Calif.

[21] Appl. No.: **951,775**

[22] Filed: **Sep. 28, 1992**

[51] **Int. Cl.**[5] **B29D 11/00**

[52] **U.S. Cl.** **264/2.6**; 264/1.7; 264/2.7

[58] **Field of Search** 264/1.7, 2.6, 2.7

[56] **References Cited**

U.S. PATENT DOCUMENTS

3,361,858	1/1968	Wichterle	264/2.6
4,573,998	3/1986	Mazzocco	623/6
4,731,079	3/1988	Stoy	623/6
4,743,254	5/1988	Davenport	623/6
4,808,182	2/1989	Barrett	623/6
4,813,954	3/1989	Siepser	623/6
4,833,890	5/1989	Kelman	623/6
4,911,714	3/1990	Poley	623/6
4,919,662	4/1990	Knoll et al.	623/6
4,936,850	6/1990	Barrett	623/6
4,993,936	2/1991	Siepser	425/408
4,997,442	3/1991	Barret	623/6
5,147,394	9/1992	Siepser et al.	623/6
5,217,491	6/1993	Vanderbilt	264/1.7

FOREIGN PATENT DOCUMENTS

3940891	6/1991	Fed. Rep. of Germany	A61L 27/00
87281928	2/1986	Japan	C03B 11/00
839522	6/1981	U.S.S.R.	A61F 1/16
2114578	6/1980	United Kingdom	C08F 220/55

OTHER PUBLICATIONS

Dreifus, et al., "Intracameral Lenses Made of Hydrocolloidal Acrylates", Ceskoslovenska oftalmologie, vol. 16, No. 2, p. 1860.

Packard, et al., "Poly-HEMA as a material for intraocular lens implantation: a preliminary report", British Journal of Ophthalmoolgy, 1981, 65, 585-587.

Primary Examiner—James Lowe

Attorney, Agent, or Firm—Poms, Smith, Lande & Rose

[57] **ABSTRACT**

Expansile hydrogel intraocular lenses are heated above their elastic deformation temperatures and deformed into an elongated configuration having at least one reduced dimension suitable for insertion through a small surgical incision. The lenses are allowed to cool in this configuration and retain the deformed shape prior to surgical implantation. Following implantation the lenses hydrate into an enlarged elastic form reassuming the original lens configuration of full capsule size.
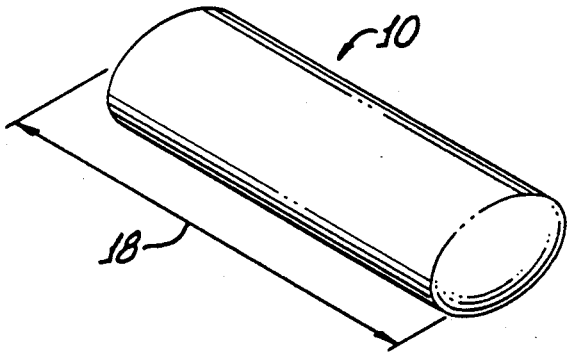
15 Claims, 4 Drawing Sheets