US007514004B1

(12) **United States Patent**
Brady et al.

(10) **Patent No.: US 7,514,004 B1**
(45) **Date of Patent: Apr. 7, 2009**

(54) **IN-TANK RECIRCULATING ARSENIC TREATMENT SYSTEM**

(75) Inventors: **Patrick V. Brady**, Albuquerque, NM (US); **Brian P. Dwyer**, Albuquerque, NM (US); **James L. Krumhansl**, Albuquerque, NM (US); **Joseph D. Chwirka**, Tijeras, NM (US)

(73) Assignee: **Sandia Corporation**, Albuquerque, NM (US)

(*) Notice: Subject to any disclaimer, the term of this patent is extended or adjusted under 35 U.S.C. 154(b) by 0 days.

(21) Appl. No.: **12/113,354**

(22) Filed: **May 1, 2008**

(51) **Int. Cl.**
C02F 1/42 (2006.01)

(52) **U.S. Cl.** **210/688**; 210/196; 210/263

(58) **Field of Classification Search** 210/196, 210/263, 688
See application file for complete search history.

(56) **References Cited**

U.S. PATENT DOCUMENTS

2,723,761	A *	11/1955	Van Der Made et al.	210/196
4,280,912	A *	7/1981	Berry et al.	210/662
4,332,685	A *	6/1982	Nowlin et al.	210/638
4,734,201	A *	3/1988	Watanabe	210/685
4,806,236	A *	2/1989	McCormack	210/94
4,917,806	A *	4/1990	Matsunaga et al.	210/662
5,281,333	A *	1/1994	Bernhardt	210/170.07
7,303,666	B1 *	12/2007	Mitsis	210/106
7,309,425	B2 *	12/2007	Bandyopadhya et al.	210/196
2002/0036172	A1 *	3/2002	Del Signore	210/748
2002/0141827	A1 *	10/2002	Breeding	405/128.75
2003/0010720	A1	1/2003	Chwirka	
2005/0000915	A1 *	1/2005	Yokosawa et al.	210/749
2007/0246429	A1 *	10/2007	Jones et al.	210/685

* cited by examiner

Primary Examiner—Chester T Barry
(74) *Attorney, Agent, or Firm*—Robert D. Watson

(57) **ABSTRACT**

A low-cost, water treatment system and method for reducing arsenic contamination in small community water storage tanks. Arsenic is removed by using a submersible pump, sitting at the bottom of the tank, which continuously recirculates (at a low flow rate) arsenic-contaminated water through an attached and enclosed filter bed containing arsenic-sorbing media. The pump and treatment column can be either placed inside the tank (In-Tank) by manually-lowering through an access hole, or attached to the outside of the tank (Out-of-Tank), for easy replacement of the sorption media.
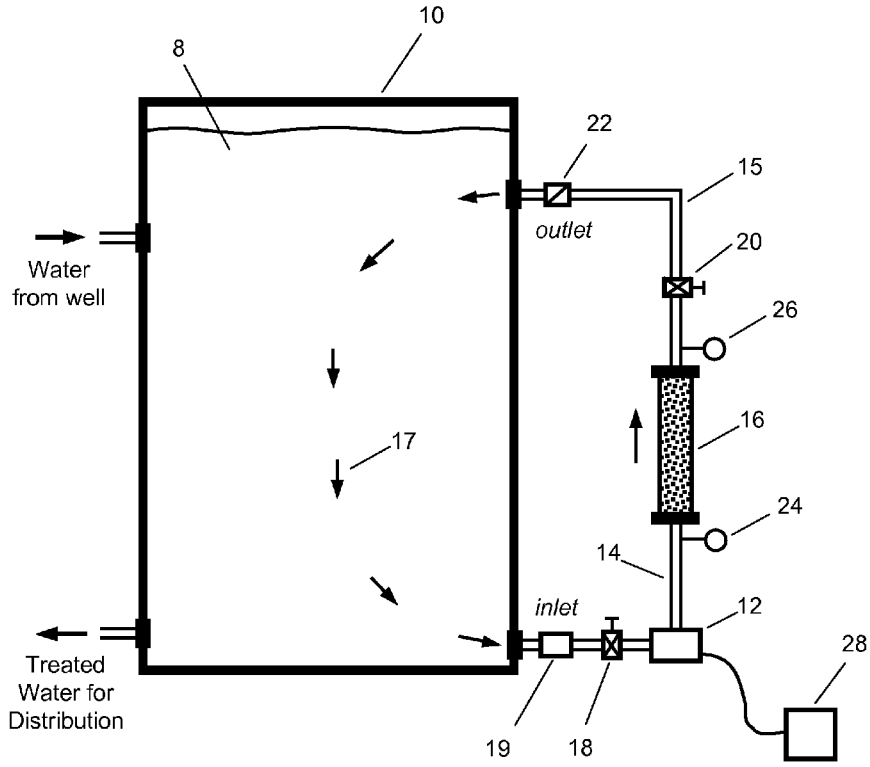
22 Claims, 8 Drawing Sheets