US009411204B2

(12) **United States Patent**
Kim

(10) **Patent No.: US 9,411,204 B2**
(45) **Date of Patent: Aug. 9, 2016**

(54) **LIQUID CRYSTAL DISPLAY DEVICE**

(71) Applicant: **Seo Yeon Kim**, Yongin (KR)

(72) Inventor: **Seo Yeon Kim**, Yongin (KR)

(73) Assignee: **SAMSUNG DISPLAY CO., LTD.**, Yongin, Gyunggi-do (KR)

(*) Notice: Subject to any disclaimer, the term of this patent is extended or adjusted under 35 U.S.C. 154(b) by 95 days.

(21) Appl. No.: **13/929,915**

(22) Filed: **Jun. 28, 2013**

(65) **Prior Publication Data**

US 2014/0125903 A1 May 8, 2014

(30) **Foreign Application Priority Data**

Nov. 6, 2012 (KR) 10-2012-0124975

(51) **Int. Cl.**
G02F 1/1333 (2006.01)
G02F 1/1362 (2006.01)

(52) **U.S. Cl.**
CPC ***G02F 1/136204*** (2013.01); *G02F 2001/133317* (2013.01)

(58) **Field of Classification Search**
None
See application file for complete search history.

(56) **References Cited**

U.S. PATENT DOCUMENTS

6,992,736	B2 *	1/2006	Saito et al.	349/58
7,471,353	B2 *	12/2008	Oohira	349/58
7,936,414	B2 *	5/2011	Hsiao et al.	349/58
2009/0067112	A1 *	3/2009	Takabayashi	361/220
2011/0164196	A1 *	7/2011	Fukayama et al.	349/43
2011/0310324	A1 *	12/2011	Jang et al.	349/58
2012/0206680	A1 *	8/2012	Onishi	349/122

FOREIGN PATENT DOCUMENTS

KR	10 2007-0052502	A	5/2007
KR	10 2008-0035784	A	4/2008
KR	10 2008-0060034	A	7/2008
KR	10 2011-0074120	A	6/2011

* cited by examiner

Primary Examiner — Dung Nguyen
Assistant Examiner — Shan Liu
(74) *Attorney, Agent, or Firm* — Lee & Morse, P.C.

(57) **ABSTRACT**

A liquid crystal display device includes a liquid crystal panel including a thin film transistor substrate and a color filter substrate that face each other, a guide member adjacent to a first side surface of the liquid crystal panel, and conductive dots connected to the thin film transistor substrate, the color filter substrate, and the guide member.
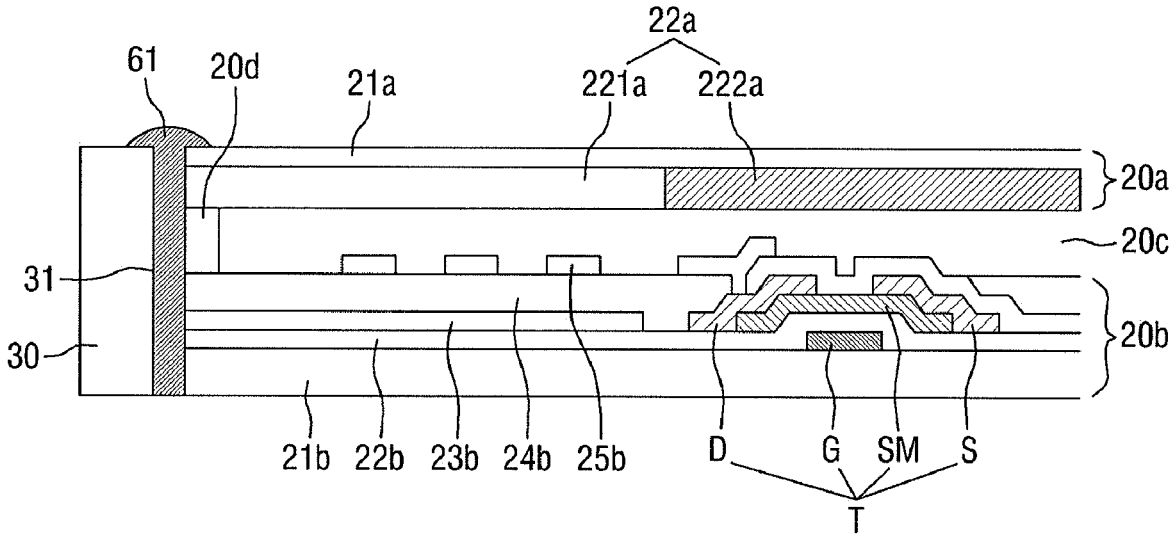
9 Claims, 9 Drawing Sheets