US009411004B2

(12) **United States Patent**
Tabatowski-Bush

(10) **Patent No.: US 9,411,004 B2**
(45) **Date of Patent: Aug. 9, 2016**

(54) **CONTINUOUS LEAKAGE DETECTION CIRCUIT WITH INTEGRATED ROBUSTNESS CHECK AND BALANCED FAULT DETECTION**

(71) Applicant: **Ford Global Technologies, LLC**, Dearborn, MI (US)

(72) Inventor: **Benjamin A. Tabatowski-Bush**, South Lyon, MI (US)

(73) Assignee: **Ford Global Technologies, LLC**, Dearborn, MI (US)

(*) Notice: Subject to any disclaimer, the term of this patent is extended or adjusted under 35 U.S.C. 154(b) by 136 days.

(21) Appl. No.: **14/288,427**

(22) Filed: **May 28, 2014**

(65) **Prior Publication Data**

US 2015/0346257 A1 Dec. 3, 2015

(51) **Int. Cl.**

G01R 31/00	(2006.01)
G01R 31/02	(2006.01)
G01R 31/36	(2006.01)

(52) **U.S. Cl.**

CPC ***G01R 31/025*** (2013.01); ***G01R 31/006*** (2013.01); ***G01R 31/3651*** (2013.01)

(58) **Field of Classification Search**

CPC . G01R 31/006; G01R 31/025; G01R 31/3651
See application file for complete search history.

(56) **References Cited**

U.S. PATENT DOCUMENTS

5,481,194	A	1/1996	Schantz	
6,731,116	B2 *	5/2004	Yamamoto	B60L 3/0015 324/503
7,417,438	B2 *	8/2008	Miyamoto	G01R 19/16542 320/121
7,453,232	B2 *	11/2008	Furukawa	H02J 7/0021 320/104
7,592,815	B2	9/2009	Yano	
8,779,784	B2 *	7/2014	Yang	G01R 27/16 324/426
2004/0189330	A1 *	9/2004	Herb	G01R 27/18 324/691
2008/0054907	A1	3/2008	Kudo	
2012/0221269	A1	8/2012	Wanner	
2013/0099826	A1 *	4/2013	Kondo	H03K 17/145 327/89

OTHER PUBLICATIONS

U.S. Appl. No. 14/104,243, filed Dec. 12, 2013, Tabatowski-Bush.
A Novel On-line Self-Learning State-of-Charge Estimation of Battery Management System for Hybrid Electric Vehicle, Yan, Jingyu, et al.; Jun. 3, 2009. (Abstract) http://ieeexplore.ieee.org/xpl/articleDetails.jsp?arnumber=5164446.

* cited by examiner

Primary Examiner — Jeff Natalini
(74) *Attorney, Agent, or Firm* — Maristyn Law LLC; Lynda F. Kouroupis; David B. Kelley

(57) **ABSTRACT**

A leakage detection circuit with integrated robustness check provides leakage detection and continuous robustness check capability. A circuit can include a first voltage divider coupled to a chassis ground and a positive terminal of a traction energy storage device (ESD). A second voltage divider, connected in series to the first voltage divider, can be coupled to the chassis ground and a negative terminal of the ESD. A third voltage divider can be coupled to both the positive and negative ESD terminals. A checkproduct based on a voltage detected at the third voltage divider can be compared to a sum VS of voltages detected at first and second voltage dividers to check for a circuit fault. Voltages detected at the first and second voltage dividers, and SOC values, can be used to detect leakage faults, including balanced leakage faults, and a fault response can be performed.
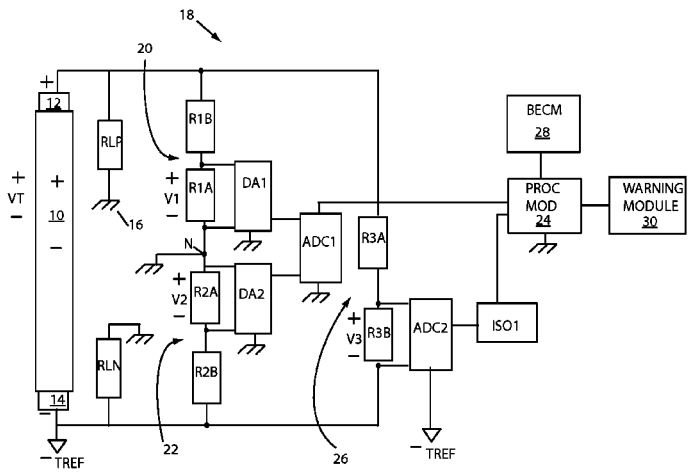
22 Claims, 5 Drawing Sheets