US009410704B2

(12) **United States Patent**
Zhang et al.

(10) **Patent No.: US 9,410,704 B2**
(45) **Date of Patent: Aug. 9, 2016**

(54) **ANNULAR STRIP MICRO-MIXERS FOR TURBOMACHINE COMBUSTOR**

(71) Applicant: **General Electric Company**, Schenectady, NY (US)

(72) Inventors: **Qingguo Zhang**, Niskayuna, NY (US); **Fei Han**, Clifton Park, NY (US)

(73) Assignee: **General Electric Company**, Niskayuna, NY (US)

(*) Notice: Subject to any disclaimer, the term of this patent is extended or adjusted under 35 U.S.C. 154(b) by 555 days.

(21) Appl. No.: **13/908,156**

(22) Filed: **Jun. 3, 2013**

(65) **Prior Publication Data**

US 2014/0352322 A1 Dec. 4, 2014

(51) **Int. Cl.**
F23R 3/28 (2006.01)
F23N 5/00 (2006.01)

(52) **U.S. Cl.**
CPC ***F23R 3/286*** (2013.01); ***F23N 5/003*** (2013.01); *F23N 2025/08* (2013.01); *F23N 2041/20* (2013.01)

(58) **Field of Classification Search**
CPC F23R 3/286; F23R 3/54; F23R 3/28; F23R 2900/00014; F23N 5/003; F23N 5/02; F23N 2025/08; F23N 2041/20
USPC 60/733, 734, 737, 738, 739, 740, 746, 60/747, 758, 773
See application file for complete search history.

(56) **References Cited**

U.S. PATENT DOCUMENTS

4,472,936	A *	9/1984	Uchiyama	F02C 3/28 422/111
5,235,814	A *	8/1993	Leonard	F23R 3/283 60/738
5,339,635	A *	8/1994	Iwai	F23D 14/26 60/733
6,438,961	B2	8/2002	Tuthill et al.	
6,810,655	B2	11/2004	Davis et al.	
6,928,823	B2 *	8/2005	Inoue	F02C 7/22 60/737
7,093,445	B2	8/2006	Corr, II et al.	
7,117,676	B2 *	10/2006	Farhangi	F23L 15/04 60/736
7,624,576	B2	12/2009	Alkabie et al.	
7,654,092	B2	2/2010	Ryan et al.	
7,997,083	B2	8/2011	Meadows et al.	
8,234,871	B2	8/2012	Davis et al.	
2008/0268387	A1 *	10/2008	Saito	F23R 3/286 431/8
2010/0186413	A1 *	7/2010	Lacy	F23R 3/10 60/740
2010/0218501	A1 *	9/2010	York	F23R 3/286 60/737
2010/0293955	A1	11/2010	Berry et al.	
2011/0225947	A1	9/2011	Lacy et al.	
2013/0014514	A1	1/2013	Romig et al.	

* cited by examiner

Primary Examiner — Steven Sutherland
(74) *Attorney, Agent, or Firm* — Ann M. Agosti

(57) **ABSTRACT**

A turbomachine combustor is provided. The turbomachine includes a combustion chamber and multiple micro-mixer nozzles arranged concentrically within a radial combustion liner and configured to receive fuel from one or more fuel supply pipes affixed to each of the plurality of micro-mixer nozzles at an upstream face. The multiple micro-mixer nozzle are also configured to receive air from a flow sleeve surrounding the radial combustion liner. Each of the micro-mixer nozzles include an annular strip having a multiple tubes or passages extending axially from the upstream face to a downstream face of each of the micro-mixer nozzles.
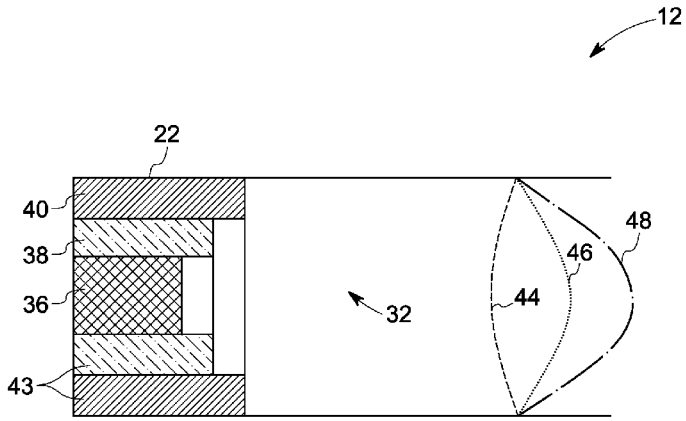
10 Claims, 4 Drawing Sheets