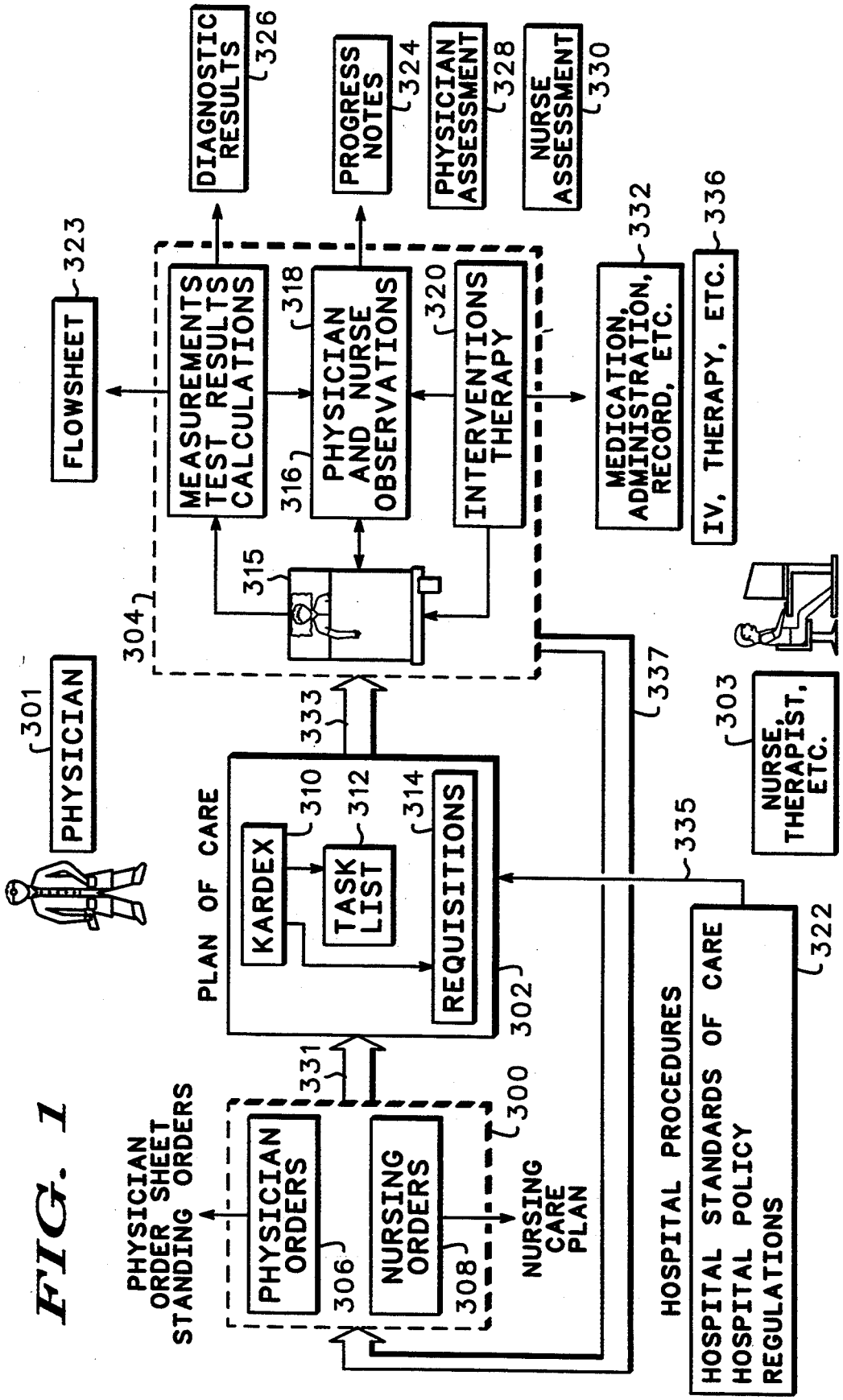
DIAGNOSTIC RESULTS
326
PROGRESS NOTES
324
PHYSICIAN ASSESSMENT
328
NURSE ASSESSMENT
330
FLOWSHEET
323
MEASUREMENTS TEST RESULTS CALCULATIONS
318
PHYSICIAN AND NURSE OBSERVATIONS
320
INTERVENTIONS THERAPY
MEDICATION, ADMINISTRATION, RECORD, ETC.
332
IV, THERAPY, ETC.
336
316
315
304
PHYSICIAN
301
333
337
NURSE, THERAPIST, ETC.
303
PLAN OF CARE
KARDEX
310
TASK LIST
312
REQUISITIONS
314
335
302
HOSPITAL PROCEDURES
HOSPITAL STANDARDS OF CARE
HOSPITAL POLICY
REGULATIONS
322
331
300
PHYSICIAN ORDER SHEET
STANDING ORDERS
PHYSICIAN ORDERS
306
NURSING ORDERS
308
NURSING CARE PLAN

FIG. 1