US009409304B2

(12) **United States Patent**
Maier et al.

(10) **Patent No.: US 9,409,304 B2**
(45) **Date of Patent: Aug. 9, 2016**

(54) **CUTTING UNIT FOR A PACKAGING MACHINE**

(75) Inventors: **Robert Maier**, Babenhausen (DE); **Elmar Ehrmann**, Bad Grönenbach (DE)

(73) Assignee: **MULTIVAC SEPP HAGGENMUELLER SE & CO. KG**, Wolfertschwenden (DE)

(*) Notice: Subject to any disclaimer, the term of this patent is extended or adjusted under 35 U.S.C. 154(b) by 132 days.

(21) Appl. No.: **13/100,730**

(22) Filed: **May 4, 2011**

(65) **Prior Publication Data**

US 2011/0271812 A1 Nov. 10, 2011

(30) **Foreign Application Priority Data**

May 6, 2010 (DE) 10 2010 019 634

(51) **Int. Cl.**

B26D 1/08	(2006.01)
B26D 5/14	(2006.01)
B65B 61/06	(2006.01)
B26D 7/00	(2006.01)
B65B 9/04	(2006.01)

(52) **U.S. Cl.**

CPC ***B26D 1/085*** (2013.01); ***B26D 5/14*** (2013.01); ***B65B 61/06*** (2013.01); *B26D 7/0006* (2013.01); *B65B 9/04* (2013.01); *Y10T 83/8843* (2015.04); *Y10T 83/929* (2015.04); *Y10T 83/9478* (2015.04)

(58) **Field of Classification Search**

CPC Y10T 83/8843; Y10T 83/9478; B26D 1/085; B26D 5/14; B26D 5/16; B26D 7/006

USPC 83/561, 562, 642, 643, 644, 646, 697, 83/698.71, 699.11, 635, 626, 557, 686, 83/638, 699.61, 651, 628, 637, 821–829, 83/613, 616, 617, 623, 624, 627, 632; 53/435, 296, 389.3

See application file for complete search history.

(56) **References Cited**

U.S. PATENT DOCUMENTS

1,569,569	A	*	1/1926	Pels	83/522.23
2,128,872	A	*	8/1938	Zahn	452/141
2,832,410	A	*	4/1958	Soss	83/628
3,182,542	A	*	5/1965	Cochran	83/453
3,373,596	A	*	3/1968	Moeller et al.	72/446
3,892,155	A	*	7/1975	Gerlach	83/460
4,160,409	A	*	7/1979	Portmann	100/257
5,848,568	A	*	12/1998	Imanishi	100/257

(Continued)

FOREIGN PATENT DOCUMENTS

CN	1785610	A	6/2006
CN	101323118	A	12/2008

(Continued)

OTHER PUBLICATIONS

Translation of EP0798254 "Device for selectively slitting, cutting or perforating" Wiechert, Edelbert. Oct. 1997.*

(Continued)

Primary Examiner — Laura M Lee

(74) *Attorney, Agent, or Firm* — Husch Blackwell LLP

(57) **ABSTRACT**

A cutting unit for a packaging machine comprises a cutting knife which is movably guided in a linear guide, and a drive for driving the movement of the cutting knife. The cutting unit further includes a curved push rod that is provided between the drive and the cutting knife.
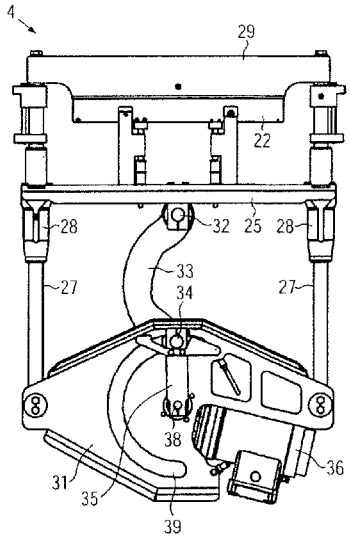
14 Claims, 2 Drawing Sheets