US009408704B2

(12) **United States Patent**
Metzger

(10) **Patent No.: US 9,408,704 B2**
(45) **Date of Patent: Aug. 9, 2016**

(54) **REVISION KNEE TIBIAL LOCKING MECHANISM**

(71) Applicant: **Biomet Manufacturing, LLC**, Warsaw, IN (US)

(72) Inventor: **Robert Metzger**, Wakarusa, IN (US)

(73) Assignee: **Biomet Manufacturing, LLC**, Warsaw, IN (US)

(*) Notice: Subject to any disclaimer, the term of this patent is extended or adjusted under 35 U.S.C. 154(b) by 0 days.

(21) Appl. No.: **14/143,546**

(22) Filed: **Dec. 30, 2013**

(65) **Prior Publication Data**

US 2014/0114427 A1 Apr. 24, 2014

Related U.S. Application Data

(62) Division of application No. 13/162,789, filed on Jun. 17, 2011, now Pat. No. 8,617,250.

(51) **Int. Cl.**
A61F 2/38 (2006.01)
A61F 2/30 (2006.01)

(52) **U.S. Cl.**
CPC ***A61F 2/389*** (2013.01); *A61F 2/3868* (2013.01); *A61F 2002/3021* (2013.01); *A61F 2002/3054* (2013.01); *A61F 2002/3069* (2013.01); *A61F 2002/30171* (2013.01); *A61F 2002/30332* (2013.01); *A61F 2002/30365* (2013.01); *A61F 2002/30377* (2013.01); *A61F 2002/30481* (2013.01); *A61F 2002/30505* (2013.01); *A61F 2002/30563* (2013.01)

(58) **Field of Classification Search**
CPC A61F 2/389; A61F 2/3859
USPC 623/20.26–20.29, 20.34, 20.32, 20.15, 623/20.14, 19.14
See application file for complete search history.

(56) **References Cited**

U.S. PATENT DOCUMENTS

3,996,624	A *	12/1976	Noiles	623/20.24
4,001,896	A *	1/1977	Arkangel	623/20.24
4,257,129	A	3/1981	Volz	
4,714,474	A	12/1987	Brooks, Jr. et al.	
4,731,087	A	3/1988	Sculco et al.	
4,936,853	A	6/1990	Fabian et al.	
4,938,769	A	7/1990	Shaw	
4,944,757	A	7/1990	Martinez et al.	
4,963,155	A *	10/1990	Lazzeri et al.	623/22.42
5,080,675	A	1/1992	Lawes et al.	
5,108,442	A	4/1992	Smith	
5,137,535	A *	8/1992	Keller	623/20.36

(Continued)

OTHER PUBLICATIONS

"U.S. Appl. No. 13/162,789, Non Final Office Action mailed Feb. 22, 2013", 10 pgs.

(Continued)

Primary Examiner — Alvin Stewart
(74) *Attorney, Agent, or Firm* — Schwegman Lundberg & Woessner, P.A.

(57) **ABSTRACT**

A tibial prosthesis assembly including a tibial component and a tibial insert. The tibial component includes an inferior bone engaging surface, a superior surface, and a first retention feature. The tibial insert includes an inferior tibial component engaging surface, a superior bearing surface, and a second retaining feature. The first and the second retaining features cooperate to mate the tibial insert with the tibial component at one of a plurality of fixed rotational orientations relative to the tibial component.
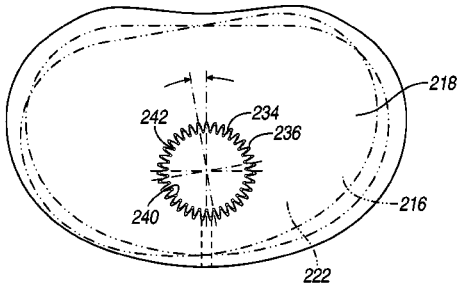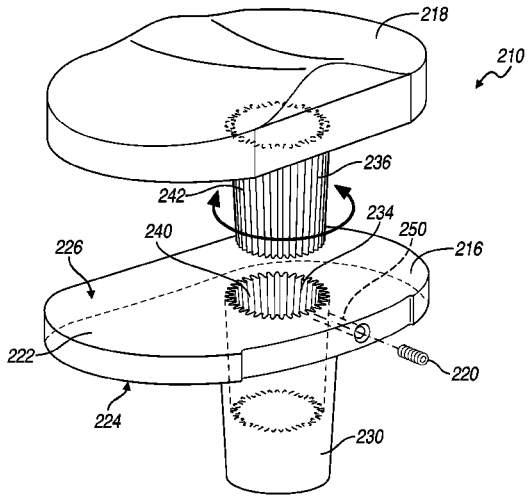
16 Claims, 5 Drawing Sheets