US009408504B1

(12) **United States Patent**
Cordeau

(10) **Patent No.: US 9,408,504 B1**
(45) **Date of Patent: Aug. 9, 2016**

(54) **TOILET PAPER DISPENSER WITH A SLIDABLE SHELF**

(71) Applicant: **Med Cordeau**, Mississauga (CA)

(72) Inventor: **Med Cordeau**, Mississauga (CA)

(*) Notice: Subject to any disclaimer, the term of this patent is extended or adjusted under 35 U.S.C. 154(b) by 0 days.

(21) Appl. No.: **14/921,056**

(22) Filed: **Oct. 23, 2015**

(51) **Int. Cl.**

A47F 3/02	(2006.01)
A47K 10/22	(2006.01)
A47K 10/38	(2006.01)
A47K 10/32	(2006.01)

(52) **U.S. Cl.**
CPC ***A47K 10/22*** (2013.01); ***A47K 10/38*** (2013.01); *A47K 2010/3233* (2013.01)

(58) **Field of Classification Search**
CPC A47K 10/22; A47K 10/38
USPC 312/34.22, 45
See application file for complete search history.

(56) **References Cited**

U.S. PATENT DOCUMENTS

2,407,971	A *	9/1946	Black	A47F 1/08	242/560.3
2,459,252	A *	1/1949	Strahan	A47K 10/3836	242/560.3
2,605,975	A *	8/1952	Page	A47K 10/22	242/560.3
3,271,090	A *	9/1966	Smithers	A47K 10/38	242/560
4,098,469	A *	7/1978	McCarthy	A47K 10/38	242/560.3
4,124,259	A *	11/1978	Harris	A47K 10/40	242/560
5,570,938	A *	11/1996	Butler	A47K 10/22	211/59.1
6,161,794	A *	12/2000	Cravatt	A47K 10/38	242/560
6,302,350	B1 *	10/2001	Burrell	A47K 10/38	242/560
6,315,237	B1 *	11/2001	Hoerner	A47K 10/38	242/560
6,957,791	B2 *	10/2005	Ellis	A47K 10/22	242/560

* cited by examiner

Primary Examiner — Hanh V Tran
(74) *Attorney, Agent, or Firm* — Crossley and Stevenson Intellectual Property Law

(57) **ABSTRACT**

A toilet paper dispenser with a slidable shelf including a cabinet having a right side, a left side, a back side, a top side, a bottom side, a continuous front surface, an interior compartment, and a hinged front door. Each of a right slot of a pair of slots and a left slot of a pair of slots is horizontally disposed within an interior surface of the right side of the cabinet and the left side of the cabinet, respectively. A right edge of a shelf and a left edge of a shelf are removably and slidably engageable within the right slot and the left slot, respectively. Each of a pair of apertures is disposed within the interior surface of each of the right side of the cabinet and the left side of the cabinet. A toilet paper roller is removably suspendable between the pair of apertures.
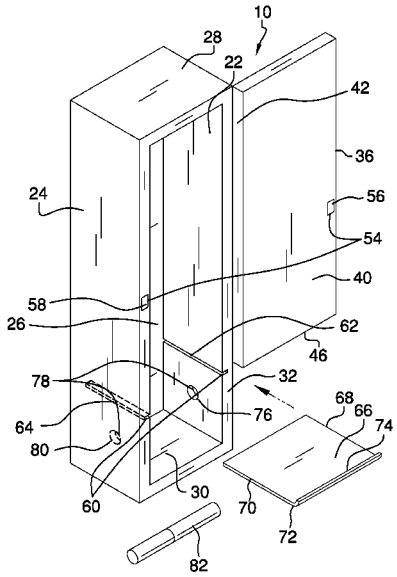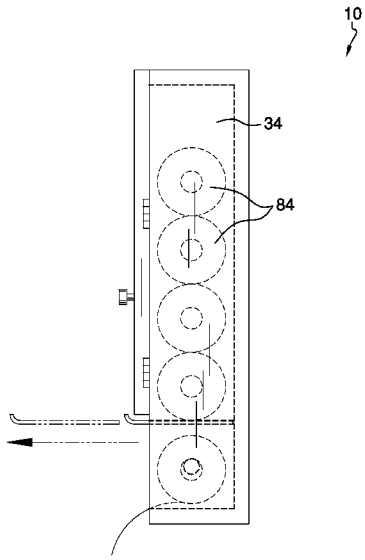
5 Claims, 4 Drawing Sheets