United States Patent [19]

Lien et al.

[11] **3,800,104**

[45] **Mar. 26, 1974**

[54] **LOW PROFILE KEYBOARD SWITCH ASSEMBLY WITH SNAP ACTION CANTILEVER CONTACT**

[75] Inventors: **Wallace A. Lien,** Palos Verdes Estates; **Mathew Pobog,** Newport Beach, both of Calif.

[73] Assignee: **Becton, Dickinson Electronics Company,** Ritherford, N.J.

[22] Filed: **Nov. 13, 1972**

[21] Appl. No.: **306,303**

[52] **U.S. Cl.** ..... **200/5 A,** 200/67 DA, 200/159 A, 200/166 BH

[51] **Int. Cl.** **H01h 13/44**

[58] **Field of Search** ..... 200/1 R, 5 R, 5 A, 6 BA, 200/17 R, 18, 159 B, 166 BH, 67, 6 BB, 159 R, 159 A

[56] **References Cited**

UNITED STATES PATENTS

2,761,936	9/1956	Verkuil	200/159 A
3,250,882	5/1966	Campbell et al.	200/159 A X
3,636,284	1/1972	Wilkes	200/67 DA
3,600,528	8/1971	Leposavic	200/159 B X
3,290,439	12/1966	Willcox et al.	200/5 A X
3,697,711	10/1972	Tetrick	200/3 A X

Primary Examiner—James R. Scott
Attorney, Agent, or Firm—Marvin H. Kleinberg

[57] **ABSTRACT**

A snap-action switch is formed from a thin resilient sheet that is elastically stressed into a three-dimensional configuration. One or more bi-stable segments are provided wherein relative movement of the end of a bi-stable segment causes a snap action into a reversely-curved configuration. Switch contacts are only engaged or disengaged after the switch has snapped into a stable configuration.
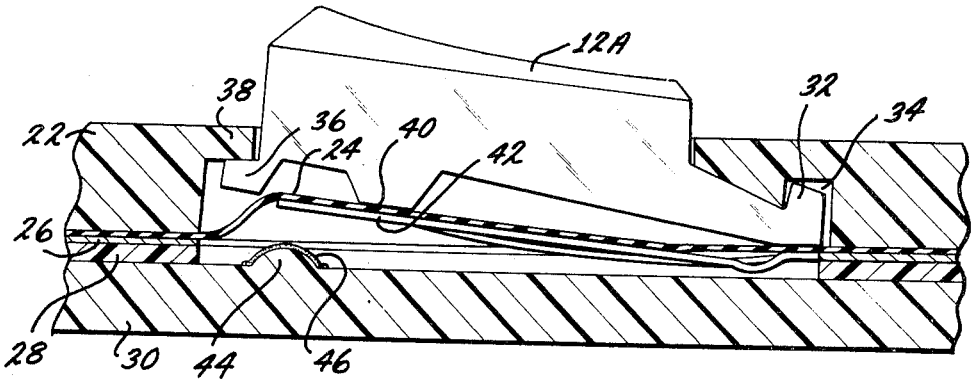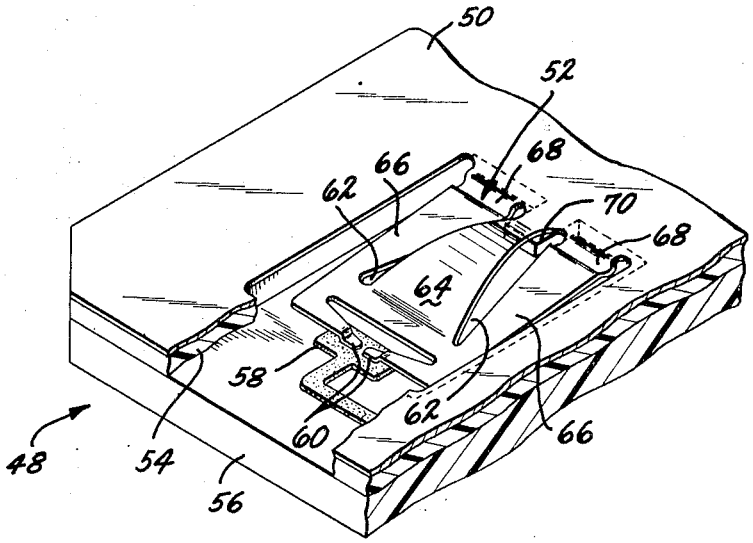
12 Claims, 17 Drawing Figures