US005583303A

United States Patent [19]

Franz

[11] **Patent Number: 5,583,303**

[45] **Date of Patent: Dec. 10, 1996**

[54] **TRANSDUCER ARRAY**

[75] Inventor: **Patrick J. Franz**, Portland, Oreg.

[73] Assignee: **InControl Solutions, Inc.**, Lake Oswego, Oreg.

[21] Appl. No.: **457,289**

[22] Filed: **Jun. 1, 1995**

Related U.S. Application Data

[62] Division of Ser. No. 948,143, Sep. 18, 1992, Pat. No. 5,431,064.

[51] **Int. Cl.**[6] **G01L 1/00**

[52] **U.S. Cl.** **73/862.046**; 73/862.68

[58] **Field of Search** 73/862.046, 862.041, 73/862.68, 862.626; 382/4, 5; 338/49

[56] **References Cited**

U.S. PATENT DOCUMENTS

D. 258,216	2/1981	Eventoff	D17/99
2,042,606	6/1936	Kotowski	201/50
2,375,178	5/1945	Ruben .	
3,210,831	10/1965	Johnson et al. .	
3,212,043	10/1965	Johnson .	
3,386,067	5/1968	Costanzo .	
3,418,850	12/1968	Goddin .	
3,503,031	3/1970	Nyhus et al.	338/99
3,608,370	9/1971	Vollenweider et al.	73/862.68
3,670,214	6/1972	Hagen .	
3,699,294	10/1972	Sudduth	200/166
3,727,165	4/1973	Hagen .	
3,806,471	4/1974	Mitchell	252/518
3,838,888	10/1974	Gynn	303/20
3,875,434	4/1975	Harden et al.	307/308
3,894,437	7/1975	Hagy et al.	73/862.68
3,898,421	8/1975	Suzumura	200/159
3,987,259	10/1976	Larson	200/5
3,988,551	10/1976	Larson .	
4,013,835	3/1977	Eachus et al.	178/18
4,014,217	3/1977	Kagasse et al. .	
4,017,697	4/1977	Larson	200/5
4,018,999	9/1977	Robinson et al.	200/5
4,034,176	7/1977	Larson	200/159
4,044,642	8/1977	Pearlman et al. .	
4,046,975	9/1977	Seeger, Jr.	200/5
4,054,540	10/1977	Michalchik	252/512
4,065,649	12/1977	Carter et al.	200/5
4,085,302	4/1978	Zenk et al.	200/5
4,106,370	8/1978	Kraus et al.	73/88
4,114,134	9/1978	Kley	338/184
4,145,317	3/1979	Sado et al.	252/512
4,158,117	6/1979	Quilliam et al. .	
4,163,204	7/1979	Sado et al.	338/114
4,210,895	7/1980	Sado et al.	338/99
4,235,141	11/1980	Eventoff	84/1.01
4,244,261	1/1981	Adachi .	
4,257,305	3/1981	Friend et al. .	
4,268,815	5/1981	Eventoff et al.	338/699
4,276,538	6/1981	Eventoff et al.	338/69
4,301,337	11/1981	Eventoff	200/5
4,305,321	12/1981	Cohn	84/1.24

(List continued on next page.)

Primary Examiner—Richard Chilcot
Assistant Examiner—Ronald Biegel
Attorney, Agent, or Firm—Marger, Johnson, McCollom & Stolowitz, P.C.

[57] **ABSTRACT**

A pressure sensitive transducer array in which a plurality of transducers are connected in series and in parallel with one another. In one embodiment, a resistive layer is formed from carbon or silver ink on a polyester film. A plurality of conductive shunt elements having greater conductivity than the resistive layer is formed on a second polyester film. The films are placed adjacent to one another with the shunt elements contacting the resistive layer. Voltage is applied across the resistive layer and pressure is applied thereto. As the pressure increases, the number of current paths set up through contact points on the shunt elements increase thereby decreasing the resistance across the resistive layer and increasing current flow. In another embodiment a plurality of plate elements are contained in a plane on one side of a dielectric layer. A plurality of plate elements are contained in a plane on the other side of the dielectric layer. As the layer is pushed together responsive to force applied, total capacitance as measured across the planes of plate elements varies.
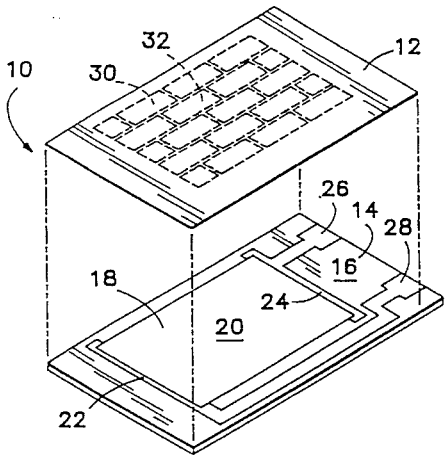
6 Claims, 8 Drawing Sheets