TAPE APPLYING APPARATUS

Filed Nov. 18, 1968 4 Sheets-Sheet 2

FIG. 2

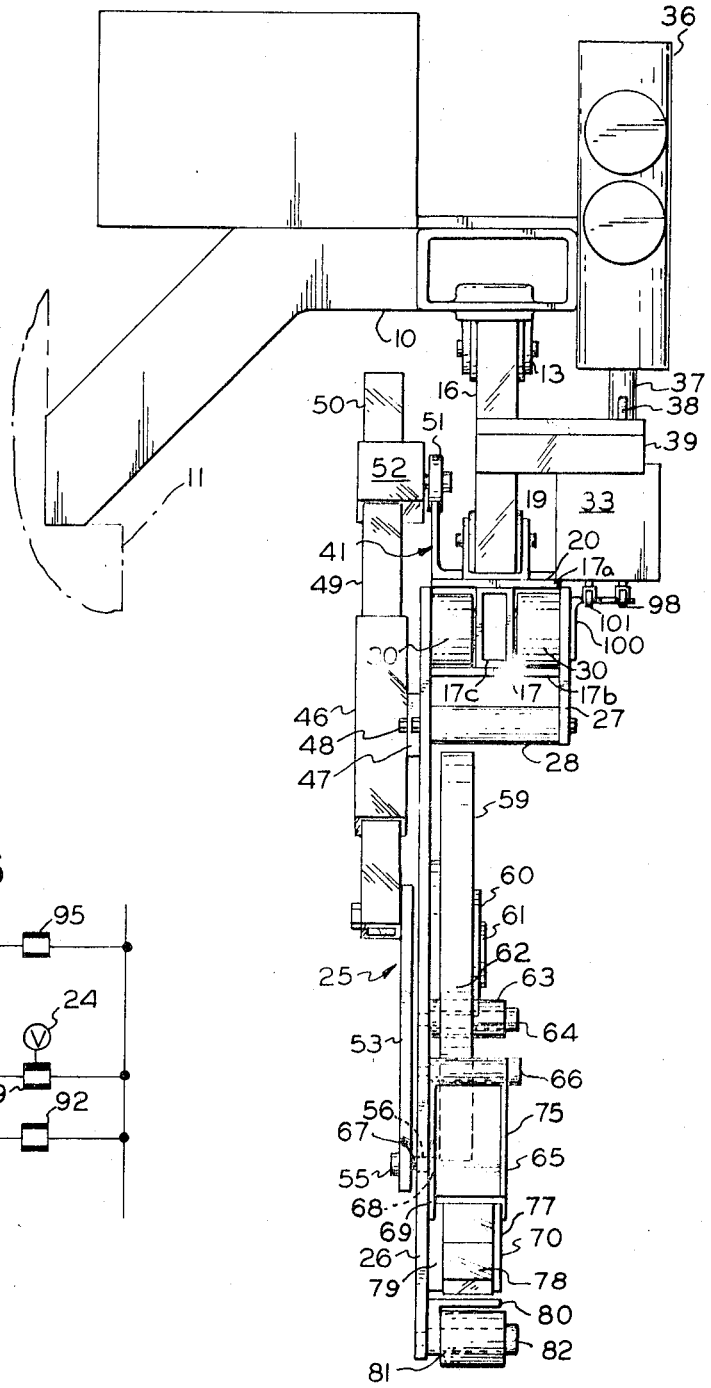

FIG. 5

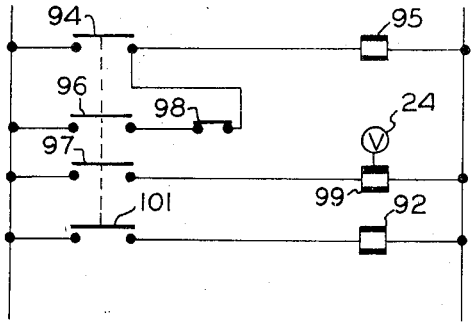

ERVILLE C. BUCK
INVENTOR

BY
BUCKHORN, BLORE, KLARQUIST & SPARKMAN
ATTORNEYS