March 28, 1961 B. SIENKIEWICZ ET AL 2,977,203

AGGLOMERATING PROCESS

Filed Aug. 27, 1958

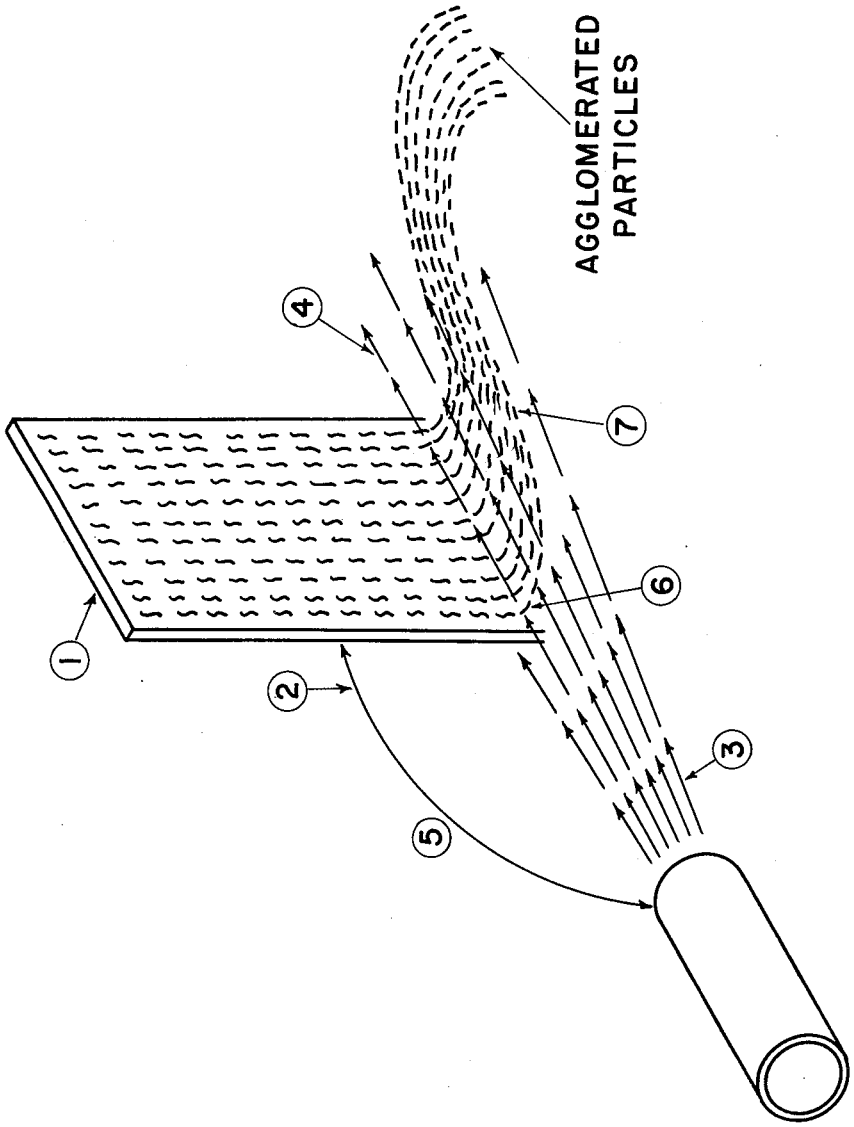

INVENTORS

BOLESLAW SIENKIEWICZ

RICHARD B. KOHLER

MARVIN SCHULMAN