FIG. 1

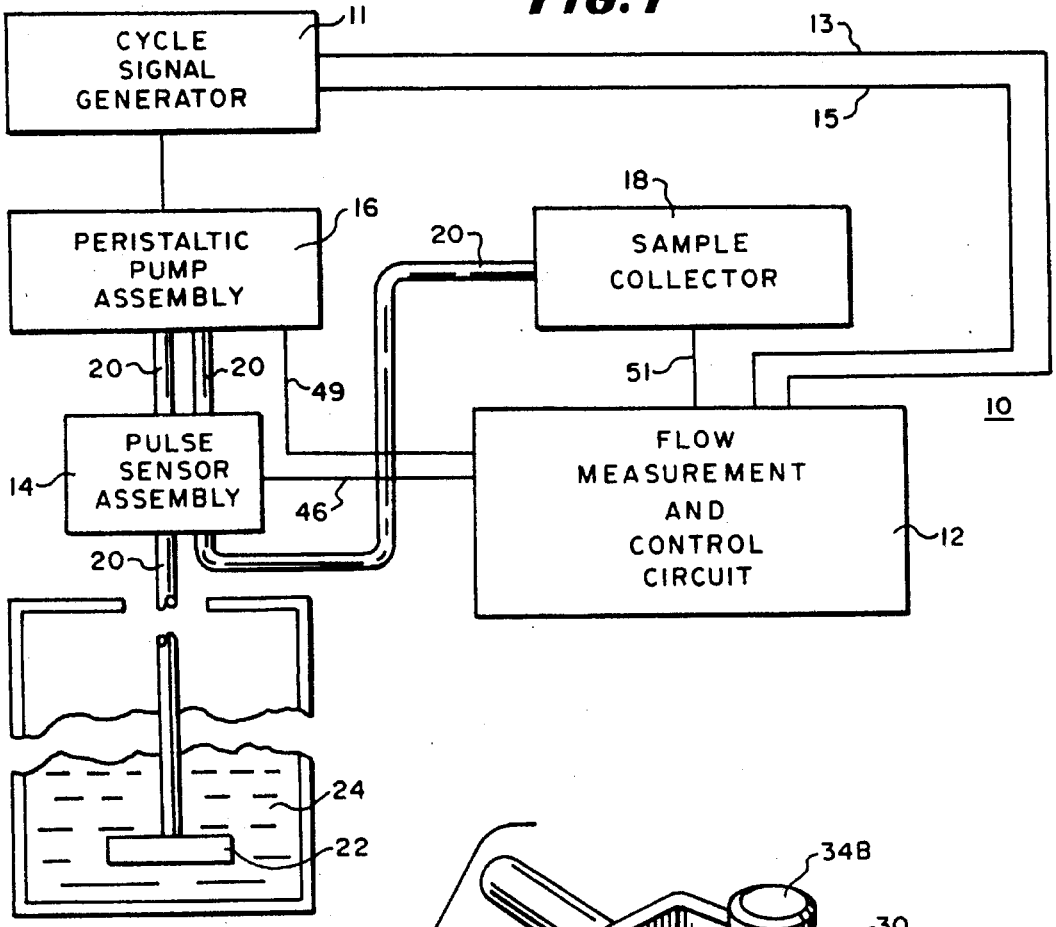
CYCLE SIGNAL GENERATOR
11
13
15
PERISTALTIC PUMP ASSEMBLY
16
18
20
SAMPLE COLLECTOR
20
20
49
51
10
PULSE SENSOR ASSEMBLY
14
46
FLOW MEASUREMENT AND CONTROL CIRCUIT
12
20
24
22

FIG. 3

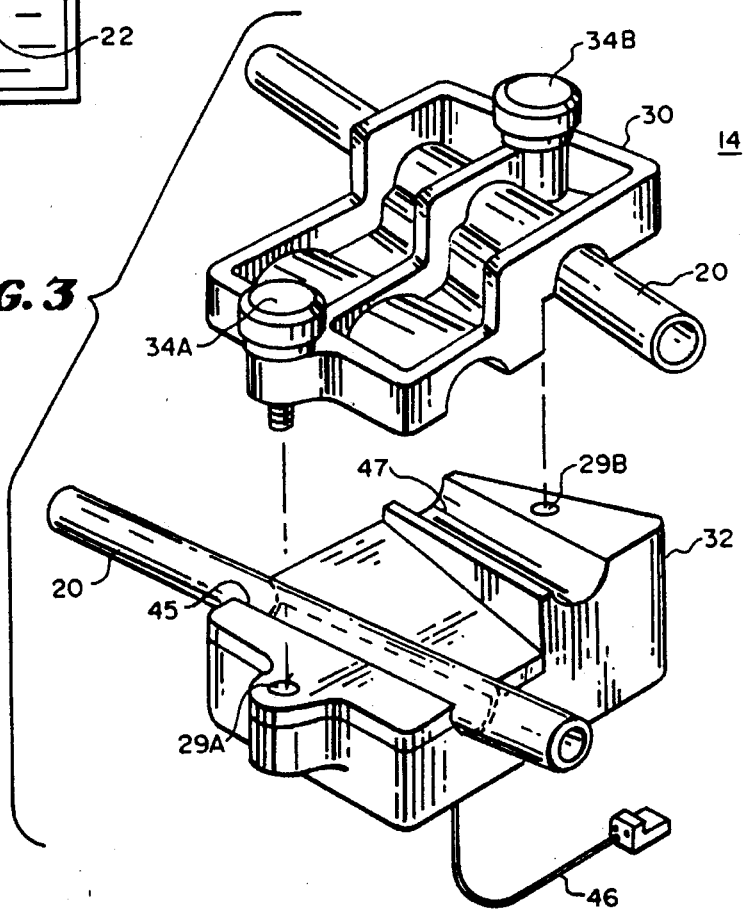
34B
30
14
20
34A
47
29B
32
20
45
29A
46