Aug. 9, 1932. H. D. BROWN ET AL. 1,871,403

SPACE DISCHARGE DEVICE

Filed Dec. 15, 1926 2 Sheets-Sheet 1

Fig. 1.

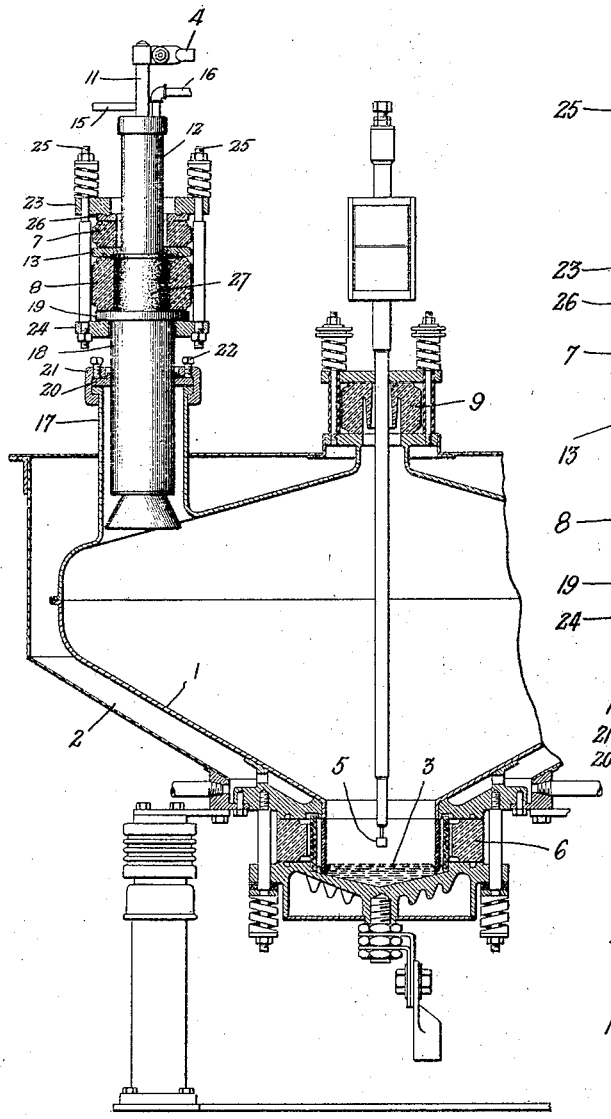

Fig. 2.

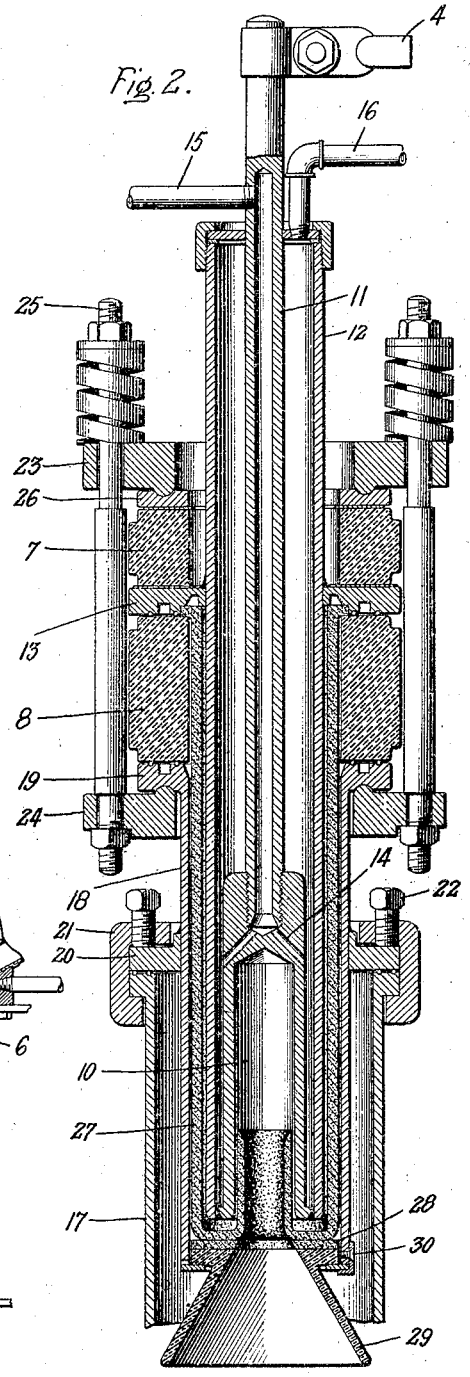

Inventors:
Herbert D. Brown,
Camil A. Sabbah,

by Alexander S. Lanier
Their Attorney.