US009364803B2

(12) **United States Patent**
Yurkovetsky et al.

(10) **Patent No.: US 9,364,803 B2**
(45) **Date of Patent: Jun. 14, 2016**

(54) **METHODS FOR FORMING MIXED DROPLETS**

(75) Inventors: **Yevgeny Yurkovetsky**, Winchester, MA (US); **Darren Roy Link**, Lexington, MA (US); **Jonathan William Larson**, Chelsea, MA (US)

(73) Assignee: **Raindance Technologies, Inc.**, Billerica, MA (US)

(*) Notice: Subject to any disclaimer, the term of this patent is extended or adjusted under 35 U.S.C. 154(b) by 0 days.

(21) Appl. No.: **13/371,222**

(22) Filed: **Feb. 10, 2012**

(65) **Prior Publication Data**

US 2012/0219947 A1 Aug. 30, 2012

Related U.S. Application Data

(60) Provisional application No. 61/441,985, filed on Feb. 11, 2011.

(51) **Int. Cl.**

B01L 3/00	(2006.01)
B01F 5/04	(2006.01)
B01F 13/00	(2006.01)
B01L 7/00	(2006.01)

(52) **U.S. Cl.**

CPC ***B01F 5/0471*** (2013.01); ***B01F 5/0473*** (2013.01); ***B01F 13/0062*** (2013.01); ***B01F 13/0071*** (2013.01); ***B01F 13/0076*** (2013.01); ***B01L 3/502784*** (2013.01); *B01L 7/525* (2013.01); *B01L 2200/0652* (2013.01); *B01L 2300/0867* (2013.01); *B01L 2400/0415* (2013.01); *B01L 2400/0487* (2013.01)

(58) **Field of Classification Search**

CPC B01L 3/0275

See application file for complete search history.

(56) **References Cited**

U.S. PATENT DOCUMENTS

2,097,692	A	11/1937	Fiegel
2,164,172	A	6/1939	Dalton
2,656,508	A	10/1953	Coulter
2,692,800	A	10/1954	Nichols et al.
2,797,149	A	6/1957	Skeggs
2,879,141	A	3/1959	Skeggs
2,971,700	A	2/1961	Peeps
3,479,141	A	11/1969	Smythe et al.
3,608,821	A	9/1971	Simm et al.
3,698,635	A	10/1972	Sickles
3,816,331	A	6/1974	Brown, Jr. et al.
3,930,061	A	12/1975	Scharfenberger

(Continued)

FOREIGN PATENT DOCUMENTS

AU	2004225691	B2	6/2010
CA	2520548	A1	10/2004

(Continued)

OTHER PUBLICATIONS

U.S. Appl. No. 61/176,281, filed May 7, 2009.*

(Continued)

Primary Examiner — Betty Forman

(74) *Attorney, Agent, or Firm* — Brown Rudnick LLP; Thomas C. Meyers

(57) **ABSTRACT**

The invention generally relates to methods for forming mixed droplets. In certain embodiments, methods of the invention involve forming a droplet, and contacting the droplet with a fluid stream, wherein a portion of the fluid stream integrates with the droplet to form a mixed droplet.
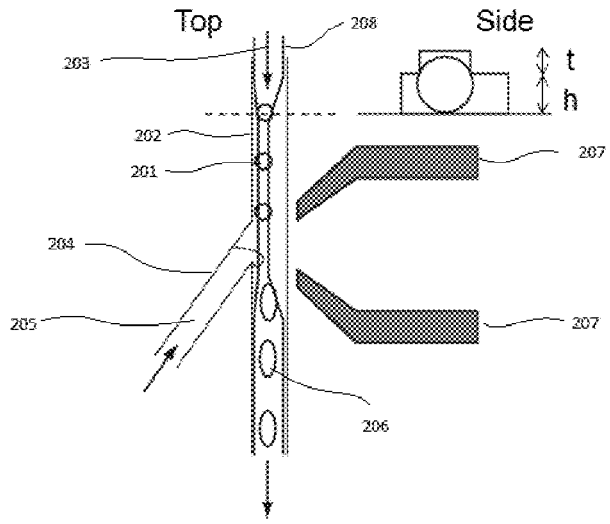
21 Claims, 11 Drawing Sheets