FIG . 2

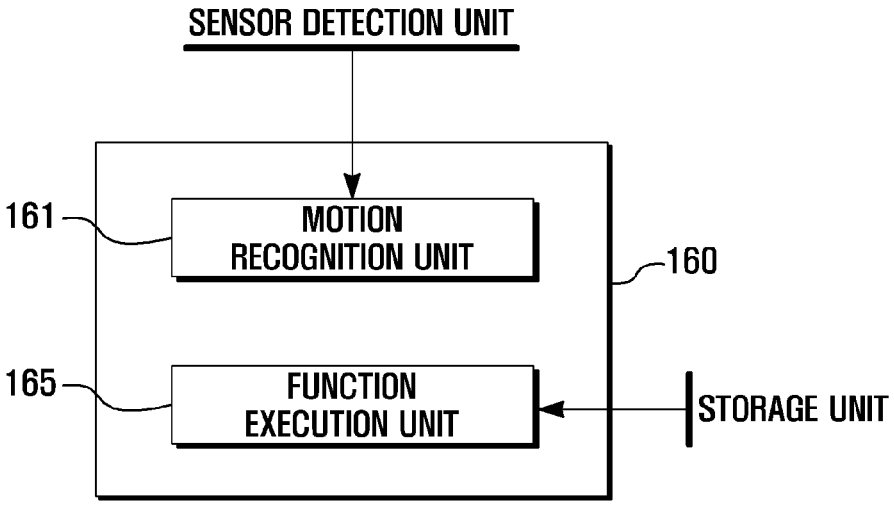
SENSOR DETECTION UNIT
161
MOTION RECOGNITION UNIT
160
165
FUNCTION EXECUTION UNIT
STORAGE UNIT