MODULAR CONSTRUCTION AND SUPPORT MEANS THEREFOR

Filed Jan. 12, 1965 5 Sheets-Sheet 1

Fig. 1.

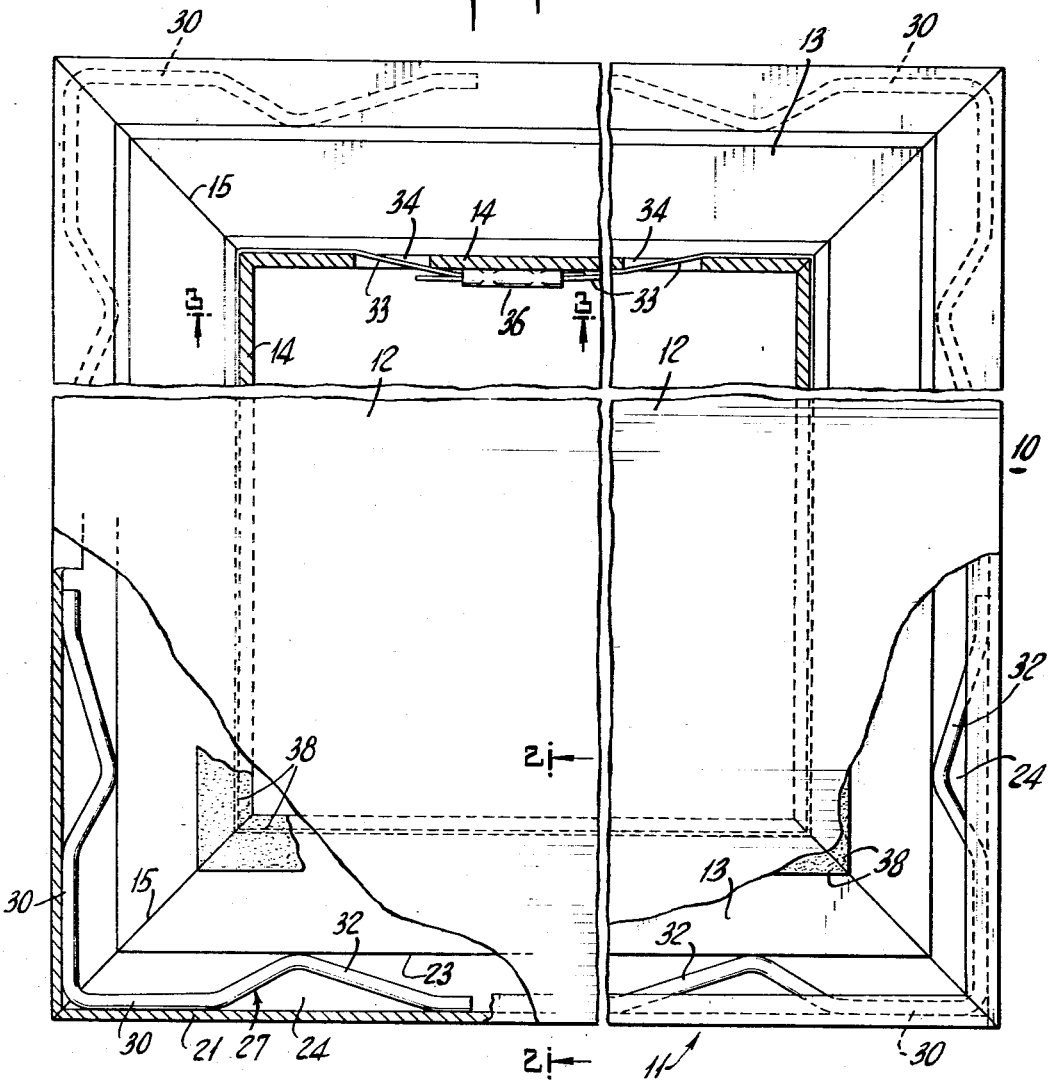

Fig. 2.

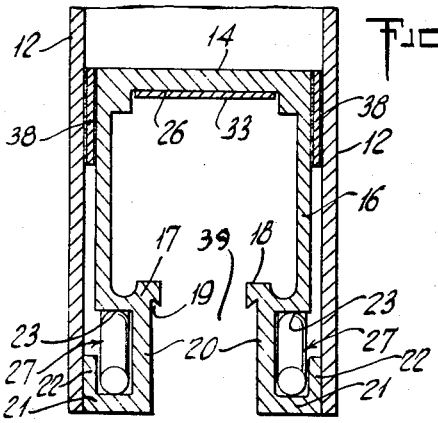

Fig. 3.

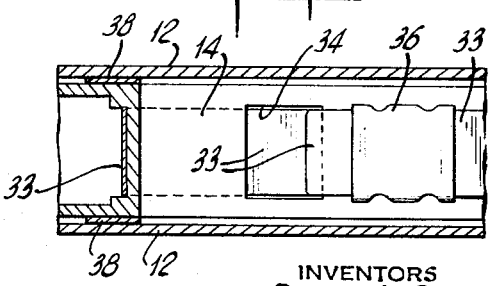

INVENTORS
EDISON A. PRICE
AUGUST B. SAK
BY
William R. Liberman
ATTORNEY