Nd^{3+} -YAG LASER AMPLIFIER AND OSCILLATOR

Filed May 14, 1964 2 Sheets-Sheet 1

FIG. 1

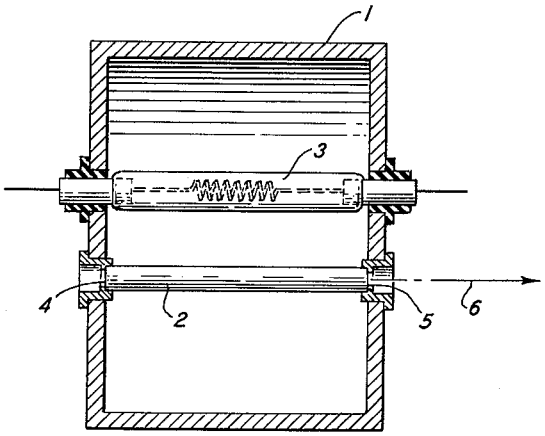

FIG. 2

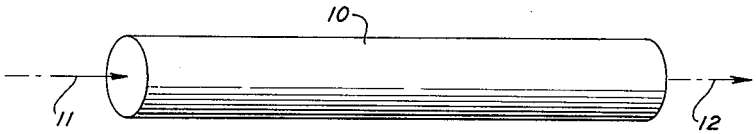

INVENTORS J. E. GEUSIC
L. G. VAN UITERT
BY
George S. Sady
ATTORNEY