US009543403B2

(12) **United States Patent**
Ding et al.

(10) **Patent No.: US 9,543,403 B2**
(45) **Date of Patent: Jan. 10, 2017**

(54) **BIPOLAR JUNCTION TRANSISTOR WITH MULTIPLE EMITTER FINGERS**

(71) Applicant: **GLOBALFOUNDRIES INC.**, Grand Cayman (KY)

(72) Inventors: **Hanyi Ding**, Colchester, VT (US); **Vibhor Jain**, Essex Junction, VT (US); **Qizhi Liu**, Lexington, MA (US)

(73) Assignee: **GLOBALFOUNDRIES Inc.**, Grand Cayman (KY)

(*) Notice: Subject to any disclaimer, the term of this patent is extended or adjusted under 35 U.S.C. 154(b) by 0 days.

(21) Appl. No.: **14/601,655**

(22) Filed: **Jan. 21, 2015**

(65) **Prior Publication Data**

US 2016/0211345 A1 Jul. 21, 2016

(51) **Int. Cl.**

H01L 29/00	(2006.01)
H01L 29/66	(2006.01)
H01L 21/306	(2006.01)
H01L 29/73	(2006.01)
H01L 29/08	(2006.01)

(52) **U.S. Cl.**

CPC ***H01L 29/66234*** (2013.01); ***H01L 21/306*** (2013.01); ***H01L 29/0804*** (2013.01); ***H01L 29/73*** (2013.01)

(58) **Field of Classification Search**

CPC .. H01L 27/082; H01L 27/083; H01L 29/0804; H01L 29/0813; H01L 29/0826; H01L 29/66234; H01L 29/66303; H01L 29/66333; H01L 29/6634; H01L 29/73; H01L 29/732; H01L 29/737; H01L 29/7371

USPC 257/579

See application file for complete search history.

(56) **References Cited**

U.S. PATENT DOCUMENTS

5,789,301	A	8/1998	Hill	
6,232,638	B1 *	5/2001	Suzuki	H01L 21/8249 257/370
6,577,200	B2	6/2003	Moriwaki	
8,227,832	B2	7/2012	Chiu et al.	
8,624,303	B2	1/2014	Fujikawa	
8,710,500	B2	4/2014	Chan et al.	

(Continued)

OTHER PUBLICATIONS

"Self-heating effects in a BiCMOS on SOI technology for RFIC applications" Malm, B.G.; Haralson, E.; Johansson, T.; Östling, M. Electron Devices, IEEE Transactions on vol. 52, Issue: 7, Publication Year: 2005, pp. 1423-1428 DOI: 10.1109/TED.2005.850634.

(Continued)

Primary Examiner — Kenneth Parker
Assistant Examiner — John Lin
(74) *Attorney, Agent, or Firm* — Thompson Hine LLP; Anthony Canale

(57) **ABSTRACT**

Device structures for a bipolar junction transistor and methods of fabricating a device structure for a bipolar junction transistor. A first semiconductor layer is formed on a substrate, and a second semiconductor layer is formed on the first semiconductor layer. The first semiconductor layer, the second semiconductor layer, and the substrate are etched to define first and second emitter fingers from the second semiconductor layer and trenches in the substrate that are laterally positioned between the first and second emitter fingers. The first semiconductor layer may function as a base layer in the device structure.
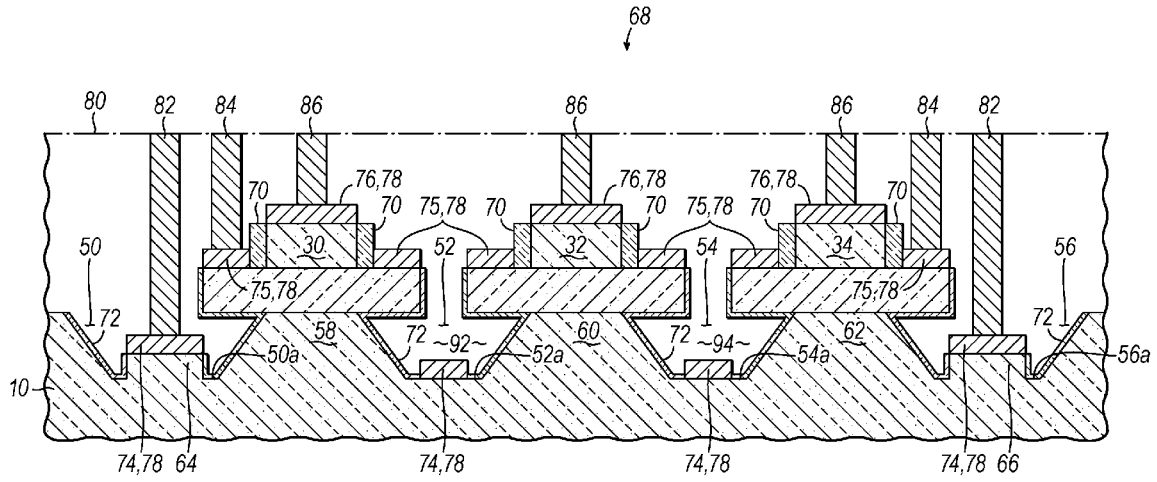
8 Claims, 8 Drawing Sheets